1150-1183 BUTTERFLY VALVES + GEARBOX + SF SWITCH BOX

FEATURES

1150-1183 butterfly valves + SF with flywheel gearboxes are intended for the manual disconnection of very diverse fluid pipes, providing position display and feedback information to the control. The valve body is made of GS cast iron. The different configurations of the butterfly materials and of the liner make it suitable for many applications. Wafer mounting with centring ears between PN10/16 and ANSI 150 flanges. The SF switch box is equipped as standard with 2 dry contacts. Due to its IP67 leak-tightness, it can be installed both indoors and outdoors. Different contacts and detectors are available as options. Lockable handle.

LIMITS OF USE

Fluid pressure: WP	16 bar up to DN 300 10 bar up to DN 400
Fluid temperature: WT°	According to the table below
Ambient temperature	-10°C / +80°C
Index of protection	IP 67

AVAILABLE MODELS

DN 32-40 to DN 400.
Connection between flanges PN10/16 and ANSI 150 RF.
2 x M20x1.5 electrical connections.

Ref.	Butterfly	Liner	Example of applications	WT° min	WT° max
1141	GS cast iron	NBR	Natural gas – NF-ROB GAZ authorisation 5 bar	-10°C	+60°C
1146	Uranus B6	Hypalon ®	Mineral acids, oxydizing fluids	-10°C	+90°C
1147	316 SS / GS cast iron	NBR carboxyl	Powdery - abrasive	-10°C	+80°C
1149	316 SS	EPDM heat	Hot water	-10°C	+130°C
1150	316 SS / GS cast iron	EPDM	Cold water – warm water (110°C at peak) - ACS	-10°C	+110°C
1151	316 SS	NBR	Hydrocarbon, natural gas, compressed air	-10°C	+80°C
1152	GS cast iron	NBR	Hydrocarbon, natural gas, compressed air	-10°C	+80°C
1153	316 SS	EPDM	Demineralised water – alkalis (110°C at peak) - ACS	-10°C	+110°C
1153 A	316 SS	White EPDM	Food use	-10°C	+110°C
1154	316 SS	FPM	Compatible aggressive fluids, petrol	-5°C	+150°C
1156	316 SS	White NBR	Compatible food fluids	-10°C	+80°C
1157	316 SS	SILICONE	Oils and fat	-15°C	+150°C
1158	Copper-alu	NBR	Seawater	-10°C	+80°C
1183	Polished stainless steel	Food SILICONE	Food fluids (FDA authorisation)	-15°C	+150°C

Information given as an indication only, and subject to possible modifications

DIRECTIVES AND MANUFACTURING STANDARDS

OBJECT	Standard	ON	OBJECT	Standard
Pressure Equipment Directive 2014/68/EC	Cat. III modules B+C1	0409	Final test	ISO 5208
ATEX Directive	II 2G/D Tx zones 1,2,21 and 22	0038	Face-to-face dimension	ISO 5752 series 20
Sanitary conformity	ACS		Flange dimension	EN 1092-1

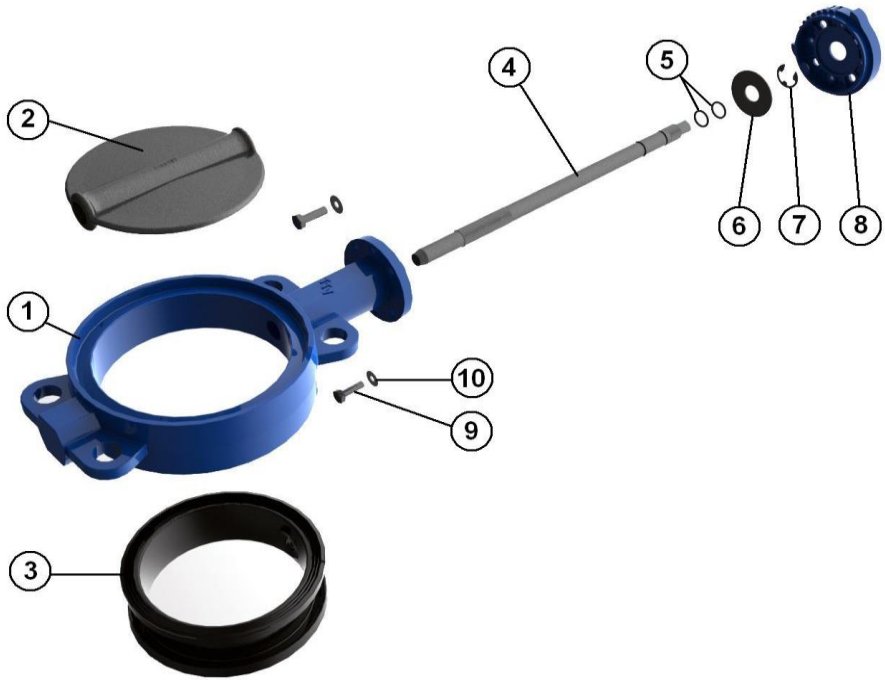

CONSTRUCTION

No.	Name	1146	1147	1149	1141	1150	1152	1151	1153	1153A	1154	1156	1157	1183	1158
1	Body	GS EN GJS-500-7 cast iron													
2	Butterfly DN32-100	Uranus B6	1.4408 SS											Mirror-polished stainless steel	Copper-alu
3	Butterfly DN125-400	Uranus B6	GS cast iron	stainless steel	GS EN GJS-500-7 cast iron			1.4408 SS							
3	Liner	Hypalon ®	NBR carboxyl	EPDM heat	NBR Gas	EPDM	NBR	NBR	EPDM	White EPDM	FPM	White NBR	Silicone	Food-grade silicone	NBR
4	Stem	304 SS	304 SS	304 SS	304 SS	420 SS	420 SS	304 SS	304 SS	304 SS	304 SS	304 SS	304 SS	304 SS	304 SS
5	O-ring	NBR	NBR	NBR	NBR	EPDM	NBR	NBR	EPDM	EPDM	FPM	NBR	EPDM	EPDM	NBR
6	Ring	steel													
7	Circlips	steel													
8	ISO mounting pad	aluminium													
9	Screw	5.6 steel													
10	Washer	steel													

Information given as an indication only, and subject to possible modifications

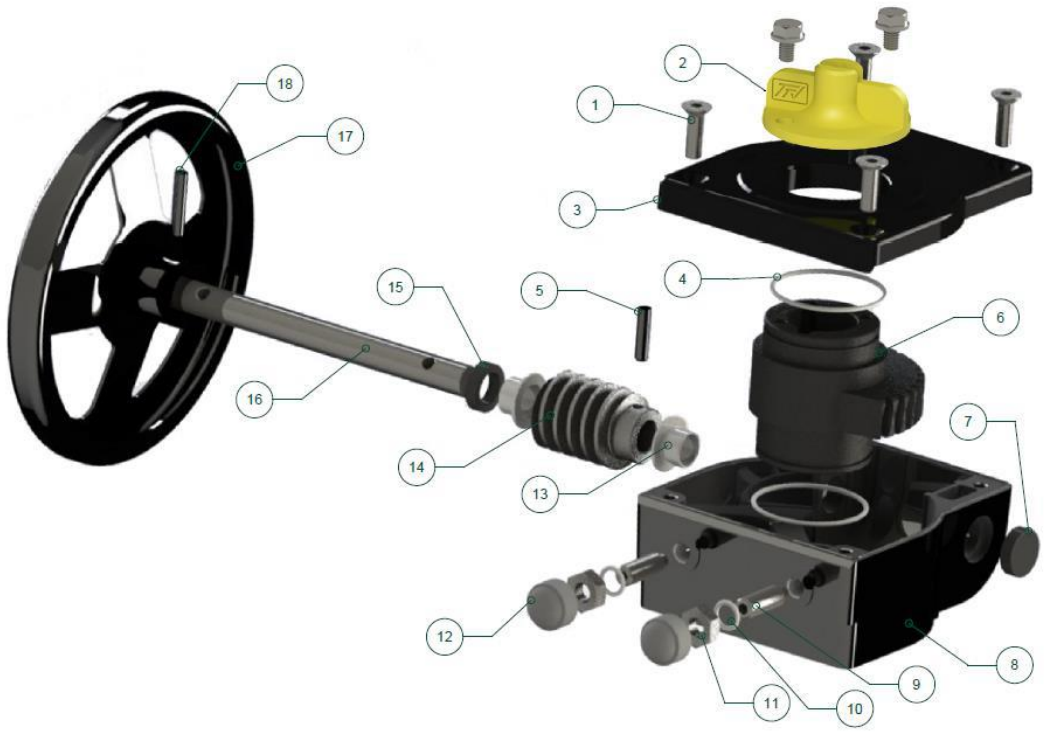

CONSTRUCTION

N°	Item	Materials
1	Bolt	AISI 304
2	Pointer	PVC
3	Cover	Aluminium
4	O-ring	NBR
5	Pin	Steel
6	Quadrant	Ductile iron EN GJS-400-15
7	Gasket	NBR
8	Body	Aluminium
9	Adjusting bolt	Steel
10	Washer	Galvanized steel
11	Nut	Galvanized steel
12	Cap	NBR 70
13	Bushing	Bronze
14	Worm	Carbon steel 45
15	Gasket	NBR
16	Shaft	Carbon steel 45
17	Handwheel	Steel
18	Pin	Steel

SECTORIEL S.A.
45 rue du Ruisseau
38290 SAINT QUENTIN-FALLAVIER – FRANCE
Telephone: +33 4 74 94 90 70 - Fax: +33 4 74 94 13 95
www.sectoriel.com / Email : sectoriel@sectoriel.fr

DIMENSIONS (mm)

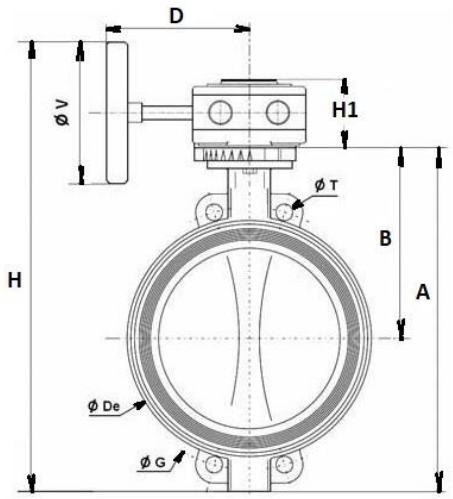

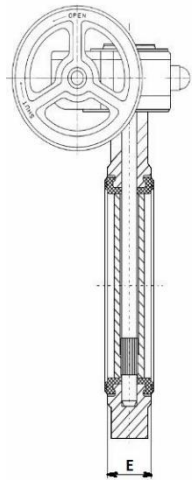

DN	32-40	50	65	80	100	125	150	200	250	300	350	400
A	206	228	248	265	298	331	349	430	461	524	570	644
B	140	156	161	169	187	206	215	255	248	280	300	340
Ø De	82	102	119	135	155	185	208	270	328	381	437	486
E	33	43	46	46	52	56	56	60	68	78	78	102
H	312,5	334,5	354,5	371,5	404,5	467,5	485,5	566,5	662,5	725,5	833	907
H1	73	73	73	73	73	73	73	73	103	103	126	126
D	115	115	115	115	115	115	115	115	223,5	223,5	325	325
Ø V	140	140	140	140	140	200	200	200	300	300	400	400
Ø F	9.5	9.5	12	14	14	17	17	21	23	26,5	26,5	33
Ø G	110	125	145	160	180	210	240	295	350	400	460	515
Ø T	18	18	18	18	18	18	23	23	23	23	23	27
Poids (kg)	3,81	5,01	5,75	5,95	7,35	9,35	10,95	16,45	28,7	37	48,5	61,5

FLOW-RATE COEFFICIENT Kv (m3/h)

DN	32-40	50	65	80	100	125	150	200	250	300	350	400
Kv	70	164	201	359	627	995	1471	2509	3936	5865	8179	10660

Information given as an indication only, and subject to possible modifications

114x, 115x AND 116x VALVES + SWITCH BOX

ASSEMBLY AND MAINTAINANCE INSTRUCTIONS

1/ CHECKS AT ACCEPTANCE

1.1 - order number check

The valve code is shown on the SECTORIEL label affixed on actuator. Check that the code is identical with that shown on delivery slip and the acknowledgement of receipt of your orde

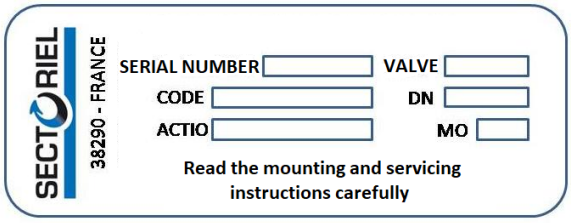

1.2 - valve diameter check

The valve code is also shown on the SECTORIEL label affixed on actuator. Check that the diameter matches that of your p installation.

1.3 - flange standard check

114x and 115x +AP **valves have smooth lugs for mounting between PN10/16 flanges as per the EN 1092-1 standard and ANSI 150 as per the ANSI B16.5 standard. Check that the flanges of the pipe installation correspond to one of these standards.**

The 1160-61-62-63-64 valves have internally threaded lugs. They are compatible with PN10/16 flanges up to DN150 and PN10 from DN200 to DN300 as per the EN 1092-1 standard. Check that the pipe installation is as per the standard.

1.4 - fluid and ambient temperature parameter check

The pressure and temperature limits for the valve in service are shown in the table below. Check that, for your service, the pressure and temperature are compatible with the limits.

Fluid pressure: WP	16 bar up to DN 200 10 bar up to DN 400
Fluid temperature: WT	According to the table below
Ambient temperature	-15°C / +80°C
Motor compressed air	minimum 6 bar / maximum 10 bar

2 / STORAGE INSTRUCTIONS

Follow our “IMESTOCK” instructions for storage.

3 / ASSEMBLY INSTRUCTIONS

3.1 - Place of installation

The **114x, 115x and 116x** +AP automatic valves can be installed both indoors and outdoors, while complying with the limit temperatures given in § 1.4.

If the valve is equipped with accessories (switch box, pilot solenoid valve), check their service temperatures and their IP code depending upon the place of installation.

3.2. - Connection to the pipe installation

3.2.1 - Mounting positions

The automatic valve has to be mounted either vertically or horizontal ly with an actuator, as shown in the diagram below:

DN40 - DN150

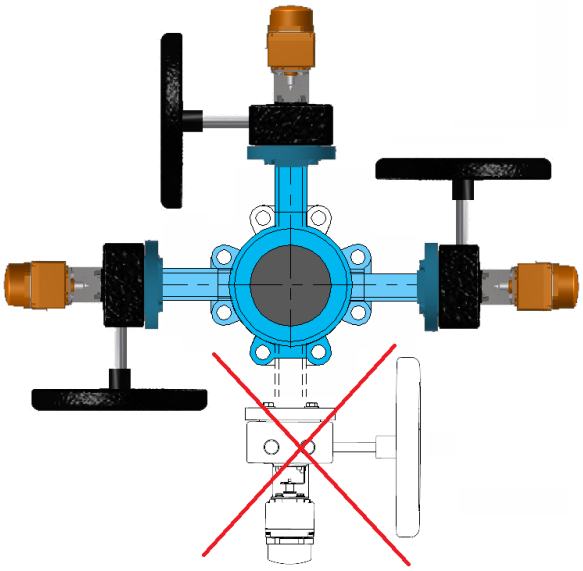

DN200 - DN400

Authorised with suitable support

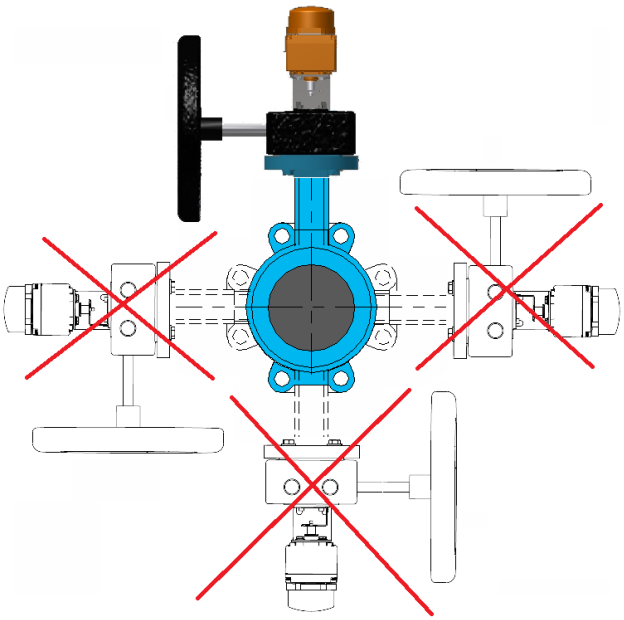

Authorised with suitable support

Information given as an indication only, and subject to possible modifications

3.2.2 - Mounting at the end of a line

114x and 115x butterfly valves must not be installed at the end of a line. Only the 116x valves can be installed at the end of a line.

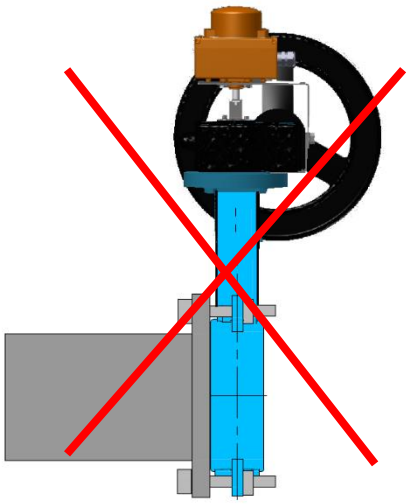

114x-115x

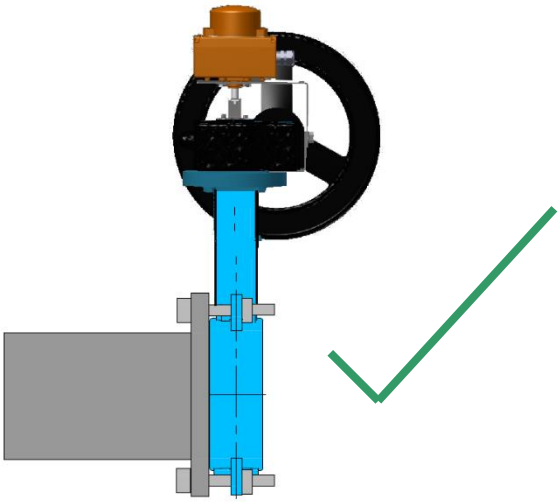

116x

Possible blocking of the butterfly: protruding length.
At valve opening, the butterfly protrudes from the body according to the lengths shown in the table below.

DN	40	50	65	80	100	120	150	200	250	300	350	400
Protrusion (mm)	3,5	3,5	9,5	17	24	33,5	45,5	69	90	110,5	131	148

You must take it into account at mounting and not abut another valve element immediately upstream and downstream which could block the movement of the butterfly (e. g. a swing valve).

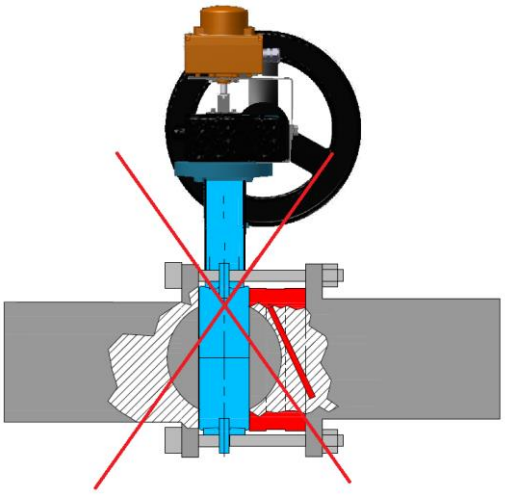

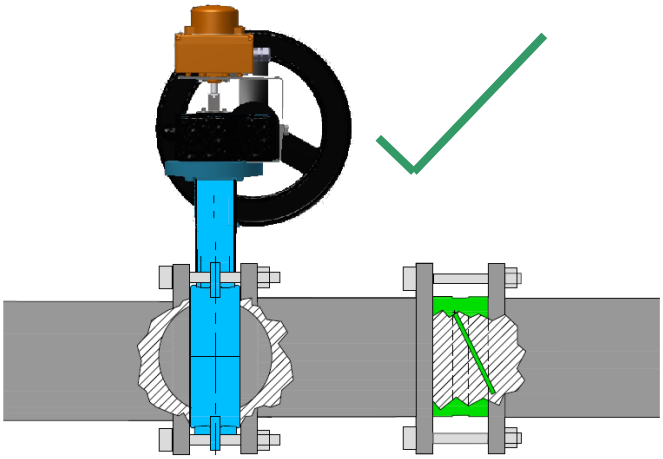

3.2.3 - Mounting precautions:

Before any intervention on the valve, please follow the following indications:

Before installing the valve, clean the piping (brazing residues, metal swarf, sealing material, etc.).
Isolate the pipe installation upstream and downstream.
Bleed the pipe installation in order to bring it to ambient temperature and pressure.
Do not force the piping to align it so as to prevent applying stress on the valve body.
Wear the safety equipment required for this type intervention (gloves and goggles).

3.2.4 - Valve installation on the piping

For all asymmetrical devices, check their orientation with regard to the normal direction of flow, and you must mount them in their operating position.

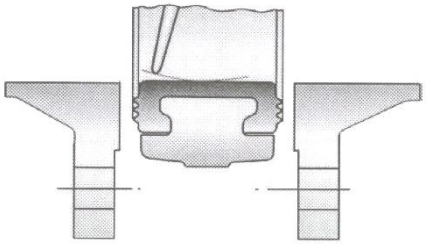

The gap in-between flanges has to be large enough to allow the valve be inserted without the elastic liner getting caught. The butterfly has to be in an almost closed position.

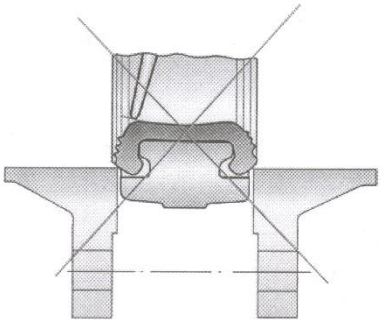

The liner can get damaged if the counter-flanges are not sufficiently spaced.

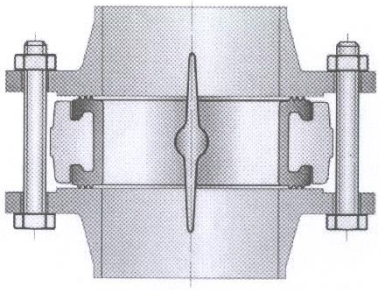

The butterfly has to be in the fully open position after positioning the valve in-between the counter-flanges and before tightening the bolts, otherwise the elastic liner might be deformed or deteriorated during the tightening of the first manoeuvre.

3.2.5 - connection to the pipe installation

Nuts and bolts for PN10/16 114x and smooth lug 115x

DN	ØD		ØK		Hole number		Nuts and bolts	
	PN10	PN16	PN10	PN16	PN10	PN16	PN10	PN16
40	150		110		4		M16x90	
50	165		125		4		M16x100	
65	185		145		4		M16x110	
80	200		160		8		M16x110	
100	220		180		8		M16x120	
125	250		210		8		M16x130	
150	285		240		8		M20x140	
200	340		295		8	12	M20x140	
250	395	405	350	355	12	12	M20x160	M24x
300	445	460	400	410	12	12	M20x160	M24x
350	505	520	460	470	16	16	M20x170	\
400	565	580	515	525	16	16	M24x200	\

Nuts and bolts for PN10/16 116x and threaded lug 118x

DN	ØD		ØK		Hole number		Nuts and bolts	
	PN10	PN16	PN10	PN16	PN10	PN16	PN10	PN16
40	150		110		4		Zinc-plated M16x30 steel screw	
50	165		125		4		VAZ M16x35	
65	185		145		4		VAZ M16x35	
80	200		160		8		VAZ M16x40	
100	220		180		8		VAZ M16x40	
125	250		210		8		VAZ M16x45	
150	285		240		8		VAZ M20x45	
200	340		295		8	12	VAZ M20x45	
250	395	405	350	355	12	12	VAZ 20x45	VAZ 24x
300	445	460	400	410	12	12	VAZ 20x60	VAZ 24x
350	505	520	460	470	16	16	VAZ 20x	\
400	565	580	515	525	16	16	VAZ 24x	\

3.3 - switch box connection to the electrical control network

The electrical connection shall be performed by qualified personnel, as per the standards in vigour.
Depending on the supply voltage, the components

3.4 - operating test

Perform an operating test as follows after having made the pneumatic and electrical connections:
A / opening test
- power the coil of the pilot solenoid valve,
- visually check that the valve is open: the switch box indicator must show the OPEN position,
b / closing test
- turn off the power supply to the coil of the pilot solenoid valve,
- visually check that the valve closes instantaneously: the switch box indicator must show the CLOSED position.

Information given as an indication only, and subject to possible modifications

4 / MAINTENANCE INSTRUCTIONS

4.1 - Before any intervention

4.1.1 - Depressurize, drain and bring to ambient temperature, the pipe installation on which the valve is mounted.
4.1.2 - Wear suitable protective equipment.
4.1.3 - Provide means of lifting and support appropriate for the maintenance operation.

Maintenance:

The absence of leak at the liner and at the valve stem should be regularly checked. If a leak occurs at the stem, replace the o-ring, if it occurs at the liner, the liner has to be replaced.

Important: All maintenance and servicing operations must be performed under the best safety conditions. Before any intervention, the valve has to be removed taking the above-mentioned precautions which apply both to mounting and removal.

Worn part replacement:

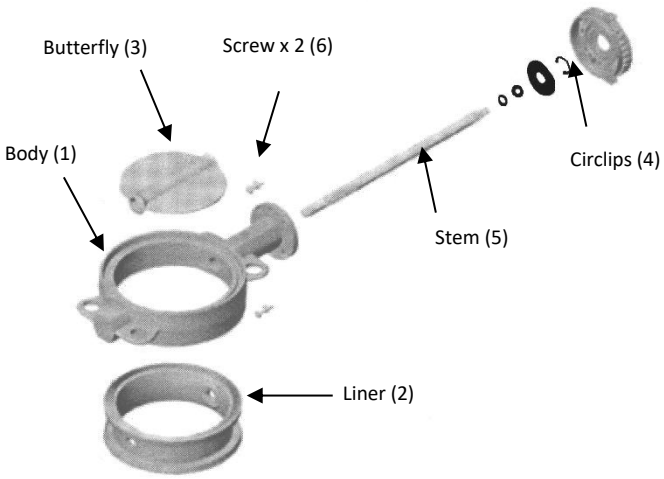

Remove the motor actuator. Unscrew the screws (6), remove the circlips (4). This frees the shaft (5), thus enabling the liner (2) and the butterfly (3) to be taken out of the body (1). Replace the worn parts: To obtain the list of spare parts for every valve, please contact our technical department at: +33 (0)474 94 90 70

4.2 - Valve maintenance

In the event of a leak on the line, check the state of the butterfly (1) and of the liner (4). If need be, replace them.

Codes of spare parts:

DN	Liner					Butterfly		Stem
	EPDM	EPDM C	NBR	SILICONE	FKM	cast iron	Stainless steel	
40	985946	985966	985986		986026	9865030	9865020	9865040
50	985947	985967	985987	986007	986027	9865031	9865021	9865041
65	985948	985968	985988	986008	986028	9865032	9865022	9865042
80	985949	985969	985989	986009	986029	9865033	9865023	9865043
100	985950	985970	985990	986010	986030	9865034	9865024	9865044
125	985951	985971	985991	986011	986031	9865035	9865025	9865045
150	985952	985972	985992	986012	986032	9865036	9865026	9865046
200	985953	985973	985993	986013	986033	9865037	9865027	9865047
250	985954	985974	985994	986014	986034	9865038	9865028	9865048
300	985955					9865039	9865029	9865049

In the event of a leak at the stem, check the state of the o-rings of the stem.

4.3 – Switch box maintenance

Refer to the switch box's IME.

5 / INSTRUCTION ON OUR PRODUCT DISPOSAL AND RECYCLING

Our valve does not contain any hazardous substance. At the valve end of life, after removing the equipment, the user's obligation is to call a scrap metal collector who will sort and recycle the different parts of the equipment. For your information, the following families of metal are present in our product: steel, stainless steel and aluminium.

With regard to the electrical parts of the equipment, they have to be separated from the rest of the valve and given to a company specialised in recycling waste from electrical and electronic equipment, as per the directive 2002/96/EC.

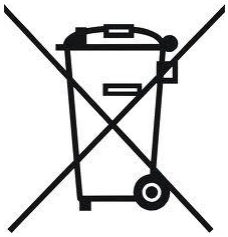

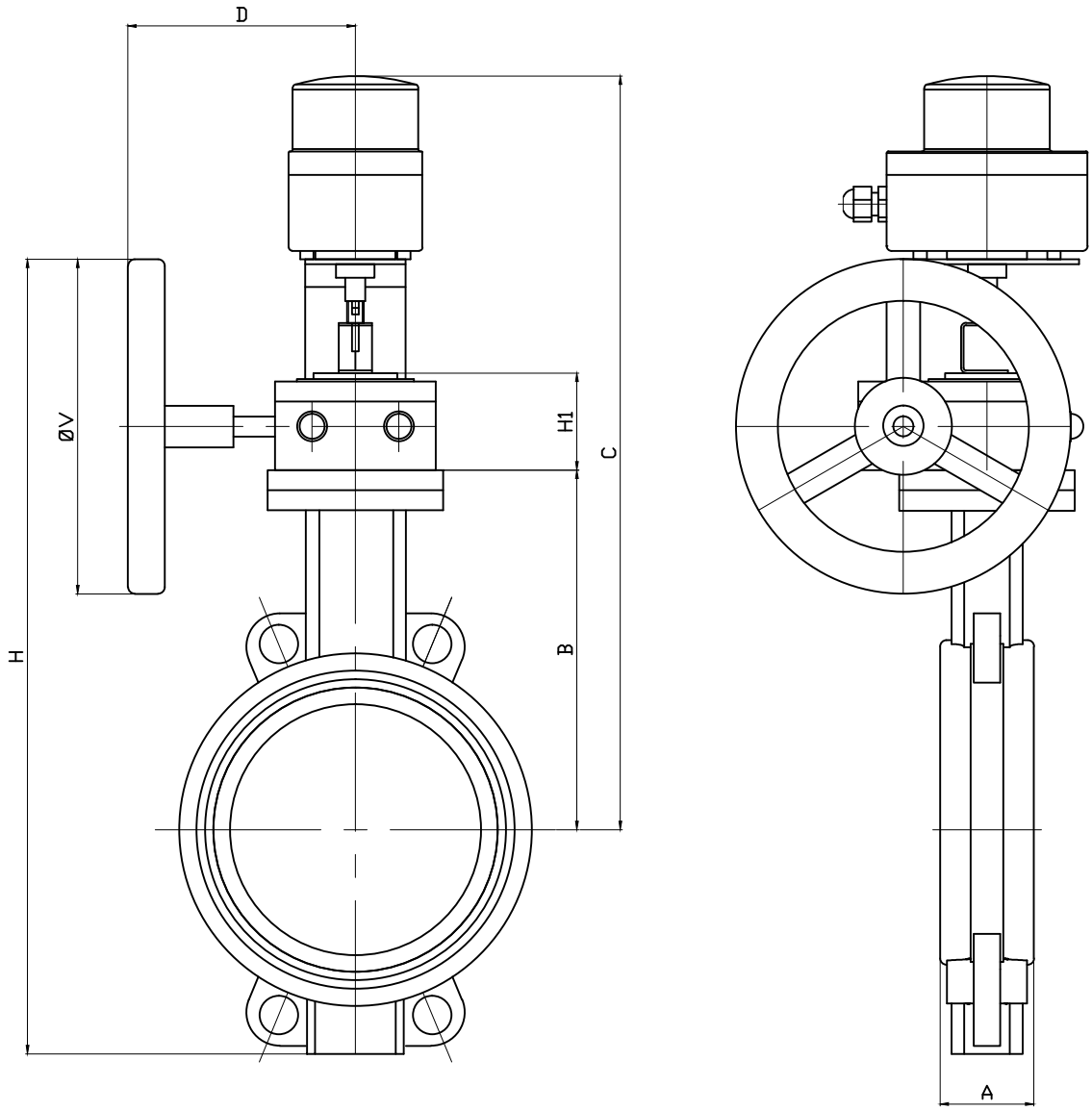

DN	100	125	150	200	250	300	350	400
A	52	56	56	60	68	78	78	102
B	187	206	215	255	248	280	300	340
C	422	441	450	490	499	531	605	645
D	120	136	136	136	223	223	345	345
H	392	452	477	566	647	709	831	894
H1	58	58	58	58	74	74	98	98
ØV	140	200	200	200	300	300	400	400
KG	8.65	10.65	12.25	17.75	30	38.3	50	63

Informations données à titre indicatif et sous réserve de modifications éventuelles
data subject to alteration

Ech: /	Date :08/06/2016	Dessiné par : E.D	Tolérances générales : +/- 0.2	Modifications	Date	REV.
ROBINET A PAPILLON 1150-1183 + REDUCTEUR + BFC/BUTTERFLY VALVE 1150-1183 + GEAR BOX + LIMIT SWITCH BOX				Matiére :		
				Poids (Kg) :		
SECTORIEL	45, Rue du Ruisseau 38297 SAINT QUENTIN FALLAVIER			Traitement : SANS		
				Plan n° Ens 1273		

SF-TYPE SOLDO SWITCH BOXES

FEATURES

The SF-type switch box is intended for equipping quarter-turn pneumatic actuators and manual valves. It makes it possible to have an easy, direct view of the valve position and of the feedback information to control. Of robust construction, it can be installed outdoors. The position indicator provides a very good visual reading of the valve position. The SF switch box can be equipped with many switches and detectors (see below). The notched cams can be manually adjusted with great accuracy, and are insensitive to vibrations.

AVAILABLE MODELS

SF: IP67 model

LIMITS OF USE

Ambiant temperature	-20°C / +80°C
IP Code	IP 67
SF	Outiside ATEX zone

MECHANICAL CONNECTION

Axis dimension	According to VDI/VDE 3845
Attachment	ISO 5211 F05
Stainless steel arches for attachment on to the actuator	NAMUR 0 : 50x25x20 mm NAMUR 1 : 80x30x20 mm NAMUR 2 : 80x30x30 mm NAMUR 3 : 130x30x30 mm NAMUR 4 : 130x30x50 mm

ELECTRICAL CONNECTION

Standard cable inputs	2 x M20x1.5

CONSTRUCTION

Casing and lid	Aluminium
Coating	Polyester paint
Stem	Stainless steel
Dome	Polycarbonate

Information given as an indication only, and subject to possible modifications

SWITCH DETAILS SF model

Ref.	Switch	Features
01	SPDT el.mech. switch silver plated contacts	Max 5A-250Vac / min 50mA-250Vac Max 5A-125Vac / min 50mA-125Vac Max 3A-24Vdc / min 50mA-24Vdc
03	SPDT el.mech. switch gold plated contacts (for Exia cert)	Max 1,8A/3A-250Vac / min 5mA-250Vac Max 2A/3A-125ac / min 5mA-125Vac Max 1,2A/1,5A-24Vdc / min 1mA-24Vdc
1F	DPDT el.mech. switch silver plated contacts	
C4	SPDT magnetic hermetically sealed reed switch.	Max 0,1A-120Vac / 1A-24Vdc
C8	DPDT magnetic hermetically sealed reed switch.	Max 0,1A-120Vac / 1A-24Vdc
N1	SPDT magnetic hermetically sealed silver plated snap acting contacts	Max 5A-250Vac / 5A-28Vdc
N3	SPDT magnetic hermetically sealed gold plated snap acting contacts	Max 1A-250Vac / 1A-30Vdc
N4	DPDT magnetic hermetically sealed silver plated snap acting contacts	Max 5A-250Vac / 5A-28Vdc
60	Inductive proximity NAMUR sensor SJ3,5-N	2 wire NC logic (for Exia cert)
62	Inductive proximity NAMUR sensor SJ3,5-SN	2 wire NC logic (for Exia cert, safety funct. low temp)
63	Inductive proximity NAMUR sensor - SJ3,5-S1N	2 wire NO logic (for Exia cert, safety funct)
70	Inductive proximity NAMUR - NJ2-V3-N	2 wire (for Exia cert)
73	Inductive proximity sensor (+70°C max.) - NBB2-V3-E2	P+F - 3 wire PNP NO amplified 10-30 Vdc, 100 mA
75	Inductive proximity sensor - IS 5026	IFM - 2 wire NO/NC amplified 5-36 Vdc, 200 mA
83	Inductive proximity sensor - NBB3-V3-Z4	P+F - 2 wire NO amplified 5-60 Vdc, 100 mA
TO	4-20 mA position transmitter	12-30 Vdc
HO	4-20 mA HART position transmitter	Atex Ex ia IIC T6 / T4 – certified 8-30Vdc

OPTIONS

There are many options for which you are invited to contact our sales service:

	SS : stainless steel box
	3-Channel L or T indicators
L	**LT** : version -40°C (according to the type of switch)
P	**LT 1** : version -55°C (according to the type of switch)
1	Cable inputs 1/2" NPT
	Pilot-solenoid valve wiring
G	EAC Certificate
U	UL Certificate

Information given as an indication only, and subject to possible modifications

DIMENSIONS (mm)

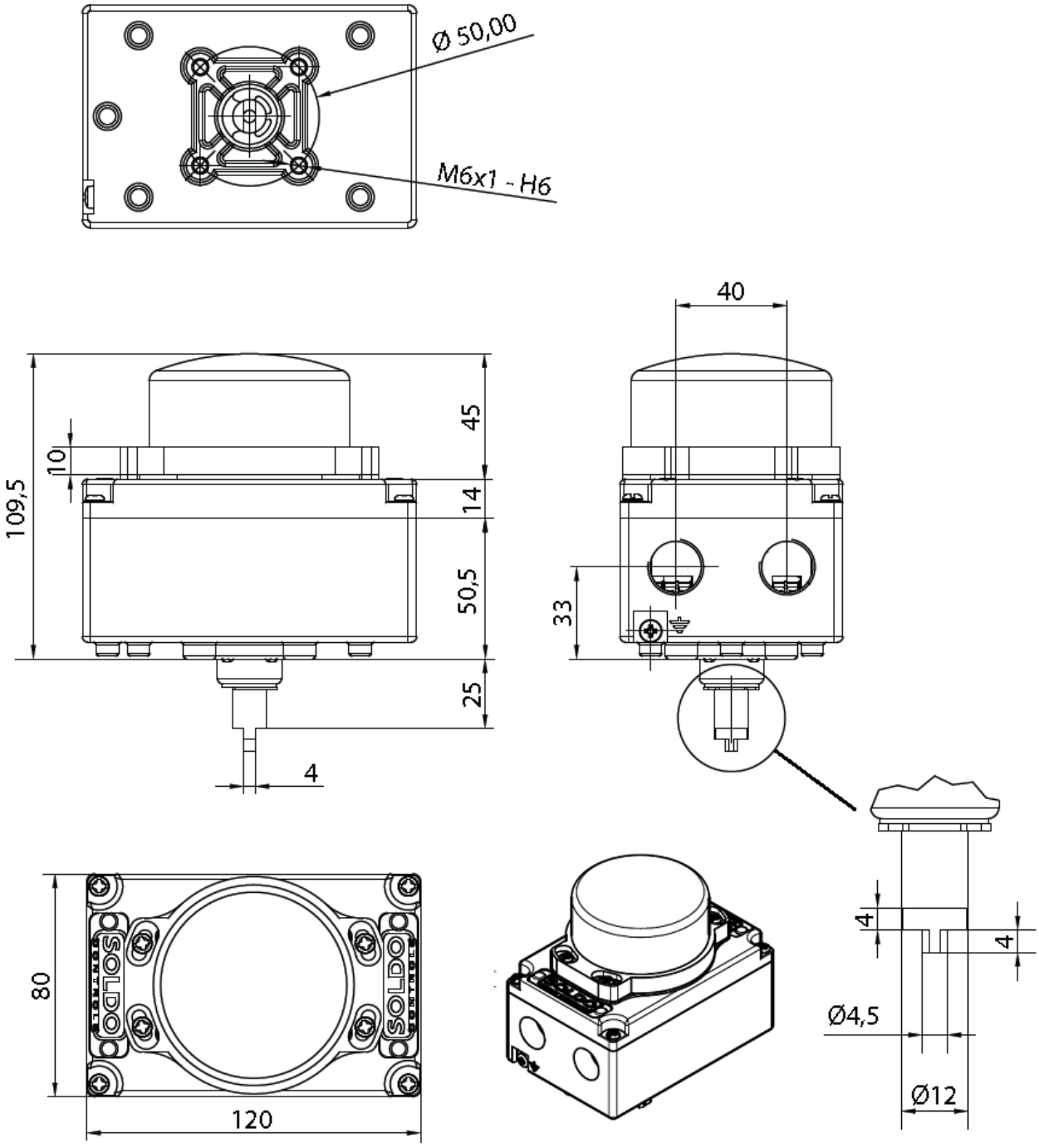

Information given as an indication only, and subject to possible modifications