1110 BUTTERFLY VALVES + NA ELECTRIC ACTUATOR

FEATURES

The 1110 double-offset butterfly valve is a high-performance valve. It is designed for the automatic shut-off of high-pressure and/or high- and low-temperature fluid pipes such as steam, bitumen, heating oils, alkalis, etc. The valve has a direction of mounting, but the seat leakage is, however, bi-directional. The single-block stem of the butterfly is mounted on bearings and has an antistatic device. The ISO 5211 mounting pad enables standardised actuators to be mounted. The actuator is perfectly adapted to both indoor and outdoor industrial use.

AVAILABLE MODELS

IR 3 / IR 2 — NA
IR PRO / IR 2 — NA-X
Ex — with NA-X
IP 67
3.1 CERT
CE 0035

1110: carbon steel body.
DN 50 to DN 300, FAF according to ISO 5752 series 20.
EN 1092 PN 25 RF wafer mounting.
24 Vac-dc, 230 Vac and three-phase 400V supply voltages.

LIMITS OF USE

Fluid pressure: PS	25 bar
Fluid temperature: WT	**Steel**: -29°C / +210°C
Ambient temperature	-20°C / +70°C (NA)
	-20°C / +55°C (NA-X)
Service factor	S2 - 70%

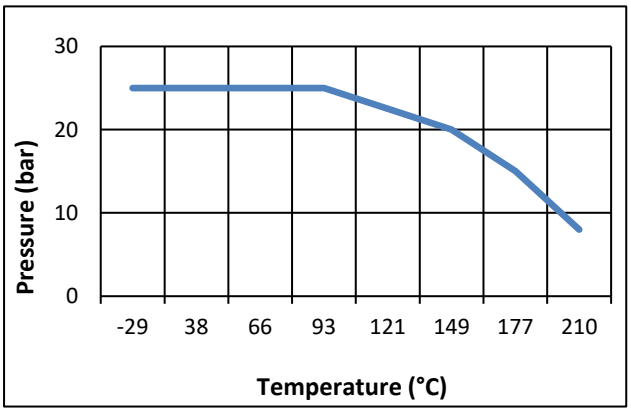

DIRECTIVES ET NORMES DE CONSTRUCTION

OBJET	Norme	OBJET	Norme
Pressure Equipment Directive 2014/68/EC	Cat.III Module H - CE 0035	Body materials	EN 1503-2
ATEX directive 2014/34	**EN 13463-1** : II 2G/D	Face-to-face dimension	ISO 5752 series 20
Material certificate	EN 10204	Flange dimension	EN 1092-1
Line leak-tightness	ANSI/FCI 70-2	Connection Motorisation	ISO 5211
Construction	API 609	Marking	MSS SP-25
Final test	ISO 5208		

Information given as an indication only, and subject to possible modifications

CONSTRUCTION

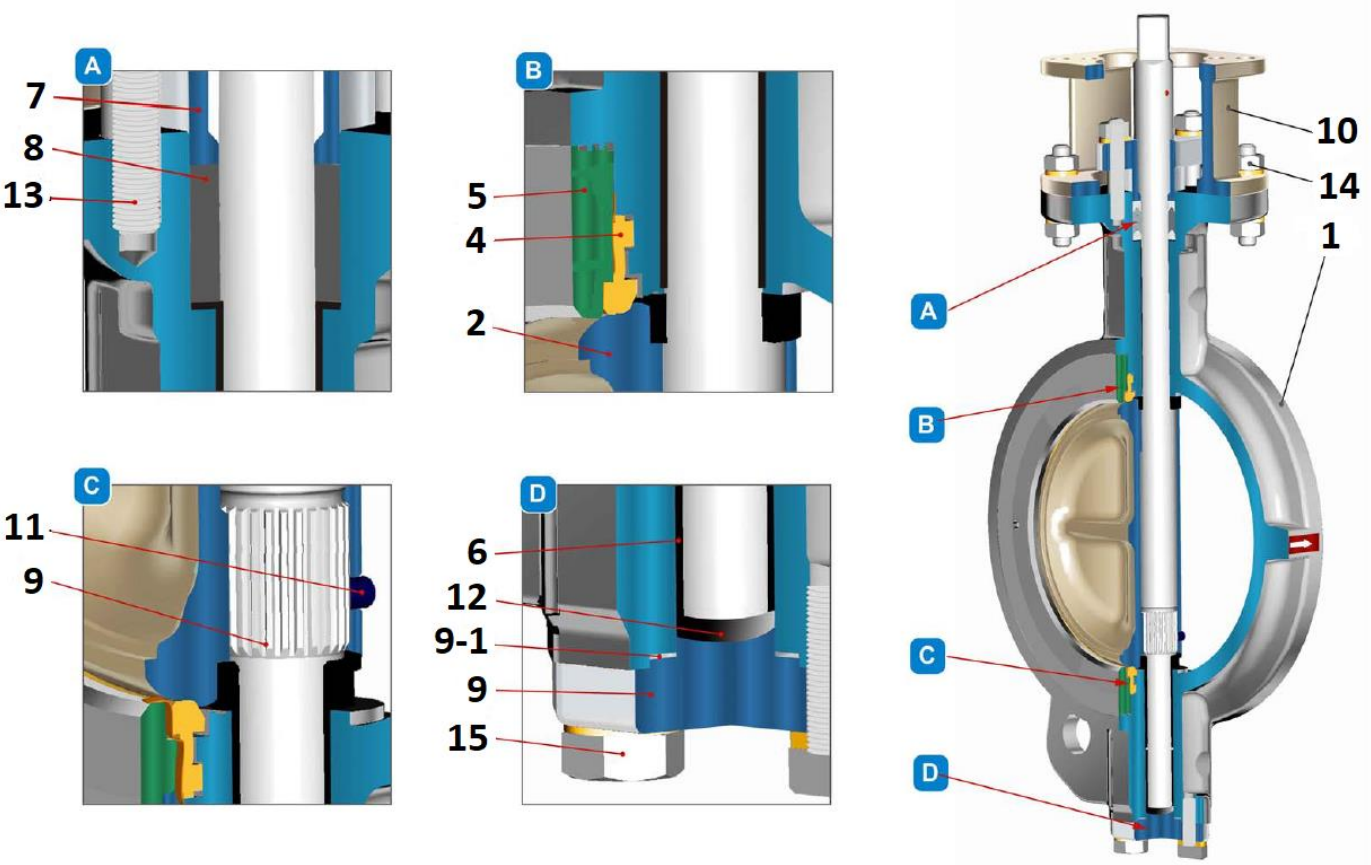

* Included in gaskets kit

No.	Name	1110 materials
1	Body	1.0619 carbon steel
2	Butterfly	1.4408 SS
3	Shaft	ASTM A564 630
4*	Seat	PTFE + 15 % graphite
5	Retainer	1.4308 SS
6*	Ring	PTFE + stainless steel
7	Gland	1.4308 SS
8*	Gland packing	PTFE filled with 15 % graphite
9	Bottom cover	1.0619 carbon steel
9-1*	Bottom cover gasket	PTFE filled with 15 % graphite
10	Yoke	1.0619 carbon steel
11*	Stop stud	ASTM A 193 Gr. B8M
12	Ring	PTFE filled with 15 % graphite + AISI 316
13	Stud	ASTM A 193 Gr. B8
14	Nut	ASTM A 194 Gr. 8
15	Bolt	ASTM A 193 Gr. B8

Information given as an indication only, and subject to possible modifications

DIMENSIONS (mm)

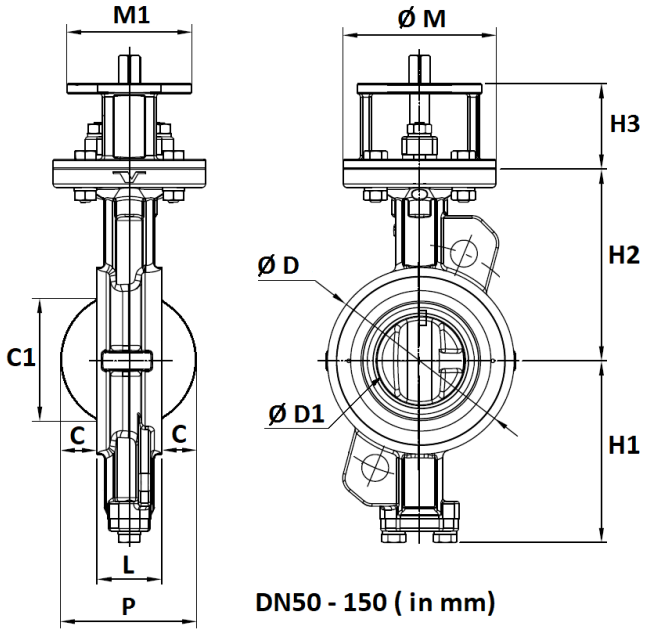

DN50 - 150 (in mm)

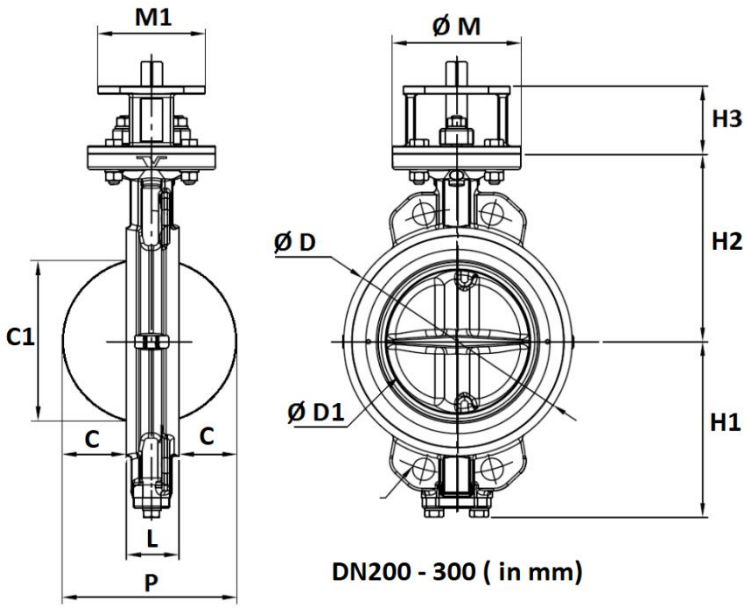

DN200 - 300 (in mm)

DN	L	H1	H2	H3	Ø D	Ø D1	C	C1	ØM	M1	P	Min pipe diameter	Weight (Kg)
50	43	99	118	60	92	37	2	49,5	90	70	47	49	3,9
65	46	110	125	60	108	63	15	62,3	90	70	76	62	4,5
80	47	128	140	70	126	78	22	65,9	125	102	91	78	7
100	53	150	157	70	153	95	25	93	125	102	103	93	9
125	57	163	170	70	184	118	36	120	125	102	129	120	12
150	56	176	185	70	212	143	50	149	125	102	156	149	13,5
200	62	206	220	80	268	187,6	70	196	150	125	202	196	22
250	68	238	260	80	326	235,5	90	243	150	125	248	243	32
300	78	269	290	100	375	282	106	289	175	160	290	289	48

Information given as an indication only, and subject to possible modifications

FLOW-RATE COEFFICIENT Kv (m^3/h)

DN	Opening angle									
	10°	20°	30°	40°	50°	60°	70°	80°	90°	100°
50	0,9	1,7	4,3	8,6	12,9	19,8	30,2	45,7	55,2	56,9
65	4,3	7,8	19,0	27,6	44,0	60,3	79,3	96,6	117,2	120,7
80	7,8	13,8	35,3	50,9	79,3	110,3	146,6	182,8	220,7	224,1
100	12,1	22,4	56,0	83,6	131,0	181,0	237,9	292,2	353,4	362,1
125	21,6	38,8	97,4	139,7	218,1	301,7	408,6	501,7	600,9	620,7
150	21,6	66,4	131,0	194,8	359,5	627,6	758,6	1013,8	1155,2	1185,3
200	36,2	118,1	233,6	346,6	470,7	659,5	848,3	1123,3	1250,0	1508,6
250	107,8	262,9	424,1	502,6	795,7	1086,2	1422,4	1775,9	2103,4	2299,1
300	146,6	357,8	576,7	831,9	1120,7	1512,9	2637,1	2977,6	3318,1	3763,8

BOLTING SIZE PN25 (in mm, not included with valves)

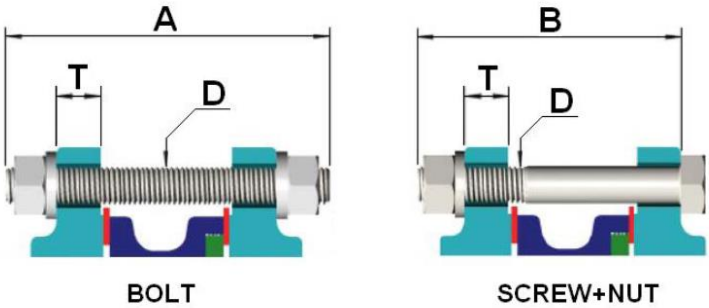

DN	50	65	80	100	125	150	200	250	300
A	130	140	145	160	180	180	190	210	220
B	125	125	130	140	155	155	165	180	195
D	M16	M16	M16	M20	M24	M24	M24	M27	M27
T	22	22	24	24	26	28	30	32	34

BOLTENING TORQUES

Bolding size	Max torque (Nm)
M16	150
M20	270
M22	434
M24	450
M26	650
M27	700

Information given as an indication only, and subject to possible modifications

NA ELECTRICAL MOTORISATION

The NA motorisation proposed as standard comprises:
- IP67 epoxy coated aluminium housing for actuator and steel gear box,
- a safety coefficient of 1.3 minimum compared to the nominal torque of the valve,
- an upstream / downstream pressure difference ΔP=10 bar max.

The electric actuator's assembly is direct.

DN	Actuator	Power (W)	Time (s)*	Standard equipment of the actuator
50	NA 06	15 W	17 s	2 adjustable limit switches 2 dry auxiliaries Condensation-resistance 20 W Position visual indicator Thermal protection of the motor (NA 06 and NA 09) Torque limiter (NA15 to NA38) Electrical connection: 2 x M20 x 1.5 glands Manual override by handwheel
65	NA 06	15 W	17 s	
80	NA 09	25 W	17 s	
100	NA 09	25 W	17 s	
125	NA 15	40 W	20 s	
150	NA 28	40 W	24 s	
200	NA 28	40 W	24 s	
250	NA 38	60 W	24 s	
300	NA 38	60 W	24 s	

For any other operating conditions, please contact us.
* indicative time for actuator running empty

MOTORISATION OPTIONS

There are many options, so please contact our sales service for more information on these:

1	2	3	4	5
NA LCU: Local control unit electric actuator	**NA PCU**: 4-20mA or 0-10V proportional control unit electric actuator	**NA RBP**: fail safe/security electric actuator	**NA-X**: zone ATEX 1 and 2 electric actuator	**SR** : spring return fail safe electric actuator
6	actuator dimensioned for an upstream / downstream pressure difference ΔP greater than 10 bar			
7	NA actuator with handwheel override			
OPTIONS ON THE VALVE				
1	Drilling of the centring lugs for PN16 flanges according to EN 1092-1 and ANSI 150 according to ANSI B16.5			
2	Threaded lugs connections			

INSTALLATION IN AN ATEX ZONE

For the 1110+NA-X automatic valve to be installed in ATEX 1 or 2 zones, this has to be specified when ordering. Our services will check of the assembly, the installation of an earthing braid, and will issue an assembly certificate. Our authorised technicians carry out these operations in the workshop. Please contact us.
The special assembly and maintenance instructions for motorised valves in the ATEX zones must be followed.

The ATEX glands and plug are not included in the supply. Use the following codes:

Aluminium gland M20x1.5 ATEX	Code 980179

Aluminium plug M20x1.5 ATEX	Code 980180

Information given as an indication only, and subject to possible modifications

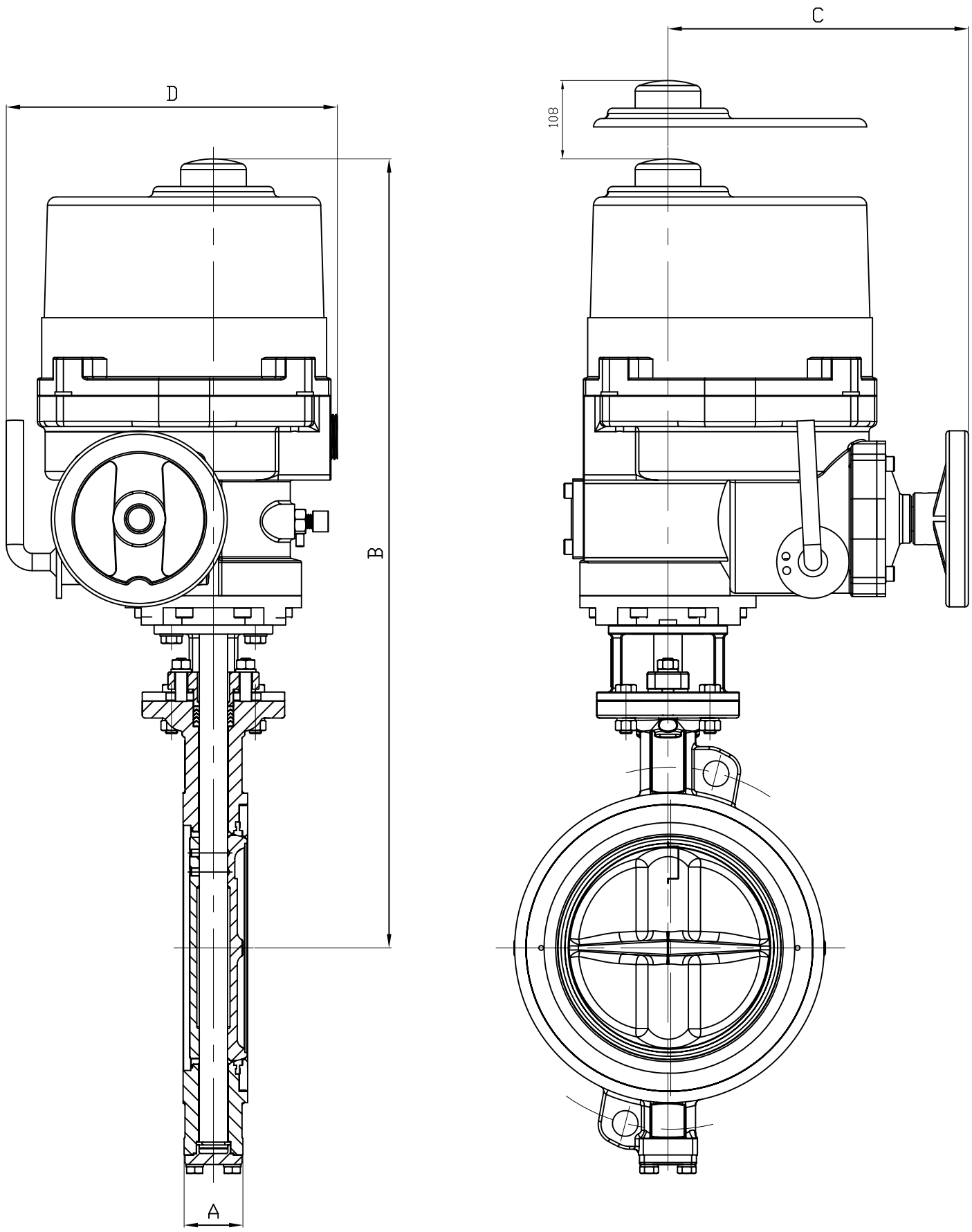

DN	50	65	80	100	125	150	200	250	300
SERVO	NA06	NA06	NA06	NA09	NA15	NA28	NA28	NA38	NA38
A	43	46	47	53	57	56	62	68	78
B	433	440	465	482	495	557	602	642	692
C	175	175	175	175	184	202	202	202	202
D	223	223	223	223	266	300	300	300	300
Kg	15.5	16.1	18.6	20.6	26.3	32.4	41	51.1	67

Informations données à titre indicatif et sous réserve de modifications éventuelles
data subject to alteration

Ech: /	Date :24/02/2020	Dessiné par : E.D.	Tolérances générales : +/- 0.2	Modifications	Date	REV.
ROBINET A PAPILLON A DOUBLE EXCENTRATION 1110/DOUBLE ECCENTRIC BUTTERFLY VALVE 1110 + SERVOMOTEUR NA/ELECTRIC ACTUATOR NA				Matiére :		
				Poids (Kg) :		
SECTORIEL	45, Rue du Ruisseau 38297 SAINT QUENTIN FALLAVIER			Traitement : SANS		
				Plan n° Ens 1433		

NA / NA-X ELECTRIC ACTUATOR

FEATURES

The NA electric actuator is intended for motorising industrial ¼ turn valves. The torque is 2500 Nm maximum. With a robust construction and IP67 epoxy-coated aluminium housing, the NA actuator is especially well suited for motorising ball valves and butterfly valves installed in workshops or outdoors. It has handle override and torque limiters (part for NA06 and NA09). Many available options. The NA-X version can be used in the 1 and 2 explosive atmospheres. Compliant with the EN 15714-2 standard.

Version NA Version NA-X

NA-X version

AVAILABLE MODELS

NA06: 60 Nm to NA250: 2500 Nm
Supply voltages: 230 Vac, 400 Vac, 24 Vac, 24 Vdc

LIMITS OF USE

Version	NA	NA-X
IP Code	IP 67	
Ambient temperature	- 20°C / +70°C	-20°C / +55°C
Service factor	S2-70%	
Explosive atmospheres	forbidden	Zones 1 and 2

MECHANICAL FEATURES

Gear box	treated steel pinions
Angle of rotation angle	90° +/- 5°
Declutching	by lever
Override control	by wheel
Torque limiter	Apart from NA06 and NA09

Actuator	NA06	NA09	NA15	NA28	NA38	NA60	NA100	NA150	NA200	NA250
Torque (Nm)	60	90	150	280	380	600	1000	1500	2000	2500
Manoeuvring time (s)	17	17	20	24	24	29	29	87	87	87
ISO 5211	F07	F07	F07/F10	F10/F12	F10/F12	F12/F14	F12/F14	F14/F16	F14/F16	F14/F16
Drive star	17	17	17	22	27	27	27	36	36	46

DIRECTIVES AND MANUFACTURING STANDARDS

2006/42/EC machine	Connection to valves: ISO 5211
Low voltage 2006/95/EC	2004/108/EC electromagnetic compatibility
ATEX 1994/9/EC: ATEX II 2 G EEx d II B T4 – NEMKO 03ATEX1342X (only NA-X actuator)	

Information given as an indication only, and subject to possible modifications

MANUFACTURING

1	Position indicator	Polycarbonate
2	Condenser	
3	Wiring terminal box	
4	Limit switches	
5	Body	Aluminium alloy
6	Base	Aluminium alloy
7	Drive bushing	Steel
8	Dome	Polycarbonate
9	Electrical motor	
10	Anti-condensation heater	
11	Wheel	Steel
12	Handle override	Steel
13	Declutching lever	Steel
14	Worm drive	Steel

ELECTRICAL FEATURES

Motor protection	Thermal	**Anti-condensation**	20 W heater
Limit switches	2 adjustable switches	**NA electrical connection**	2 x C.G. M20x1.5
Auxiliary switches	2 adjustable dry switches	**NA-X electrical connection**	2 x C.G. M20x1.5 ATEX (**NOT SUPPLIED on option**)

Actuator	**NA06**	**NA09**	**NA15**	**NA28**	**NA38**	**NA60**	**NA100**	**NA150**	**NA200**	**NA250**
Power (W)	15	25	40	40	60	90	180	98	180	180
Voltage	380V – 50Hz									
Holding current (A)	00:13	00:18	0.3	0.3	00:33	00:52	0.73	00:52	0.73	0.73
Inrush current (A)	00:23	00:36	00:59	0.74	0.78	01:24	1.68	0.78	1.68	1.68
Voltage	220V – 50Hz									
Holding current (A)	00:45	00:58	0.95	0.95	1.3	1.5	02:15	1.5	02:15	02:15
Inrush current (A)	0.63	0.89	01:12	01:37	1.85	02:34	3.4	02:34	3.4	3.4
Voltage	24V – 50 Hz									
Holding current (A)	3.2	4.3	6.5	8.1						
Inrush current (A)	6	8	12	14						
Voltage	24V DC									
Holding current (A)	2.2	3.5	4.5	6.5						
Inrush current (A)	4.1	4.1	6.6	13.8						

Information given as an indication only, and subject to possible modifications

DIMENSIONS (mm)

NA 06 to NA 100

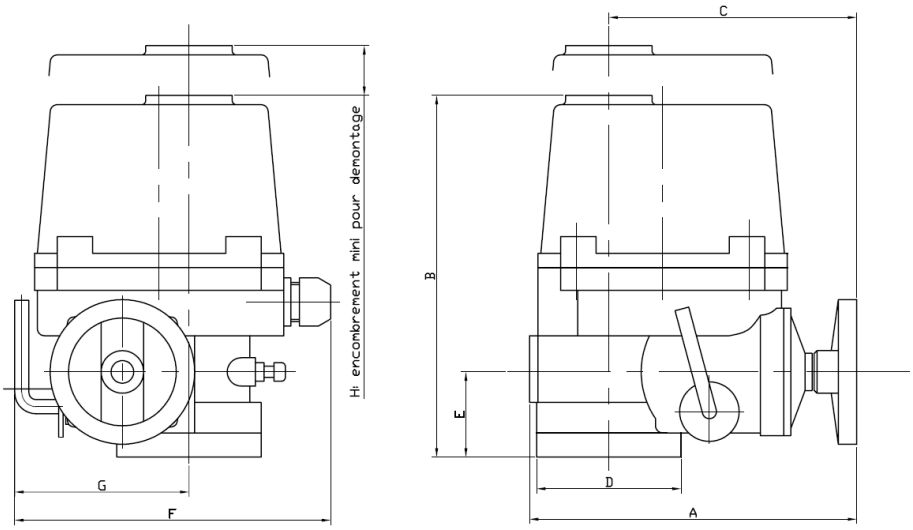

NA 150 to NA 250

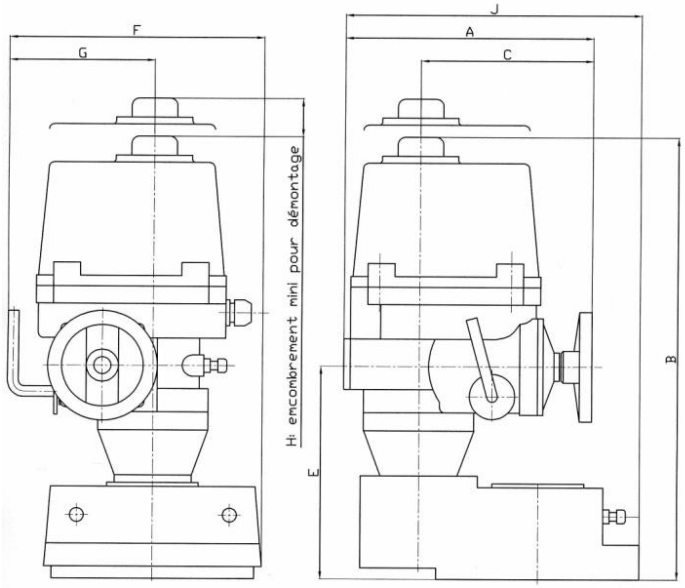

NA	A	B	C	D	E	F	G	H
06-09	231	255	175	102	60	223	113	108
15	261	255	184	120	60	266	139	108
28-38	285	302	202	145	70	300	159	130
60-100	325	343	226	175	78	349	191	178
150-200-250	325	556	226	-	273	388	191	178

Information given as an indication only, and subject to possible modifications

WIRING DIAGRAM

Wiring for 230V 50Hz voltage (NA06-NA09)

1	Do not use
2	Do not use
3	Common
4	phase
5	Closing command
6	Opening command
7	Opening indicator light (suggestion)
8	Closing indicator light (suggestion)
9	Closing auxiliary
10	Closing auxiliary
11	Opening auxiliary
12	Opening auxiliary

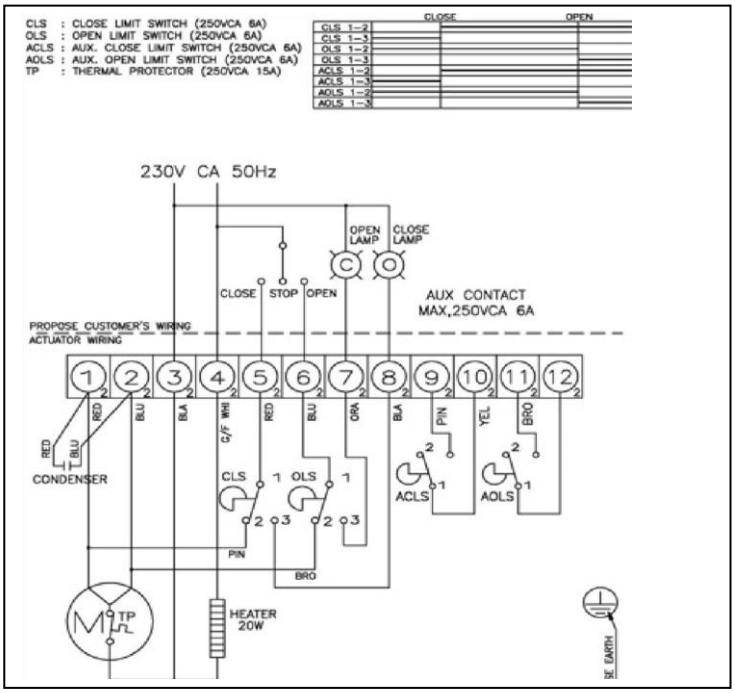

Wiring for 230V 50Hz voltage (other models)

1	Do not use
2	Do not use
3	Common
7	Overheating indicator light (suggestion)
8	Closing indicator light (suggestion)
9	Opening indicator light (suggestion)
10	Opening command
11	Closing command
12	phase
13	Closing auxiliary
14	Closing auxiliary
15	Opening auxiliary
16	Opening auxiliary

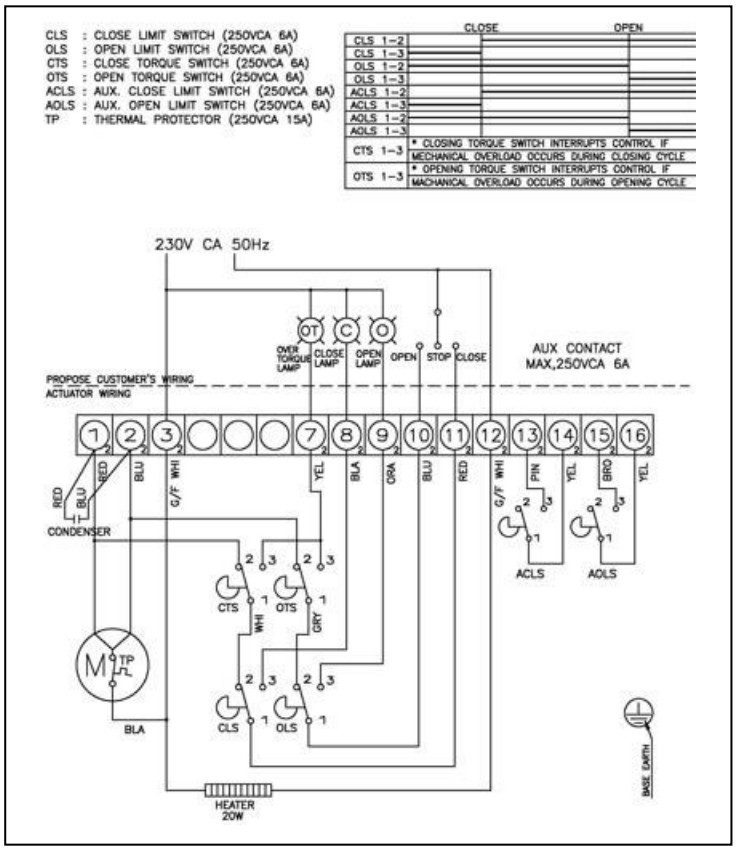

Information given as an indication only, and subject to possible modifications

Wiring for 380V 50Hz voltage (NA06-NA09)

1	U phase
2	V phase
3	W phase
4	Heater power supply
5	Connected to the closing 11
6	Connected to the opening 10
7	Not used
8	Closing indicator light (suggestion)
9	Opening indicator light (suggestion)
10	Opening command
11	Closing command
12	Heater power supply
13	Closing auxiliary
14	Closing auxiliary
15	Opening auxiliary
16	Opening auxiliary

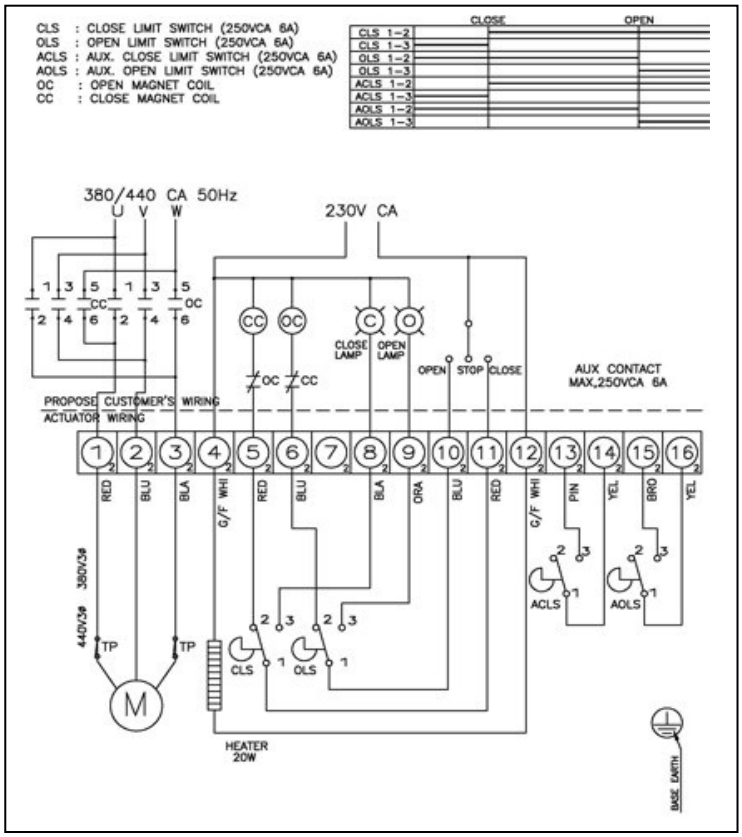

Wiring for 380V 50Hz voltage (other models)

1	U phase
2	V phase
3	W phase
4	Heater power supply
5	Connected to the closing 11
6	Connected to the opening 10
7	Overheating indicator light (suggestion)
8	Closing indicator light (suggestion)
9	Opening indicator light (suggestion)
10	Opening command
11	Closing command
12	Heater power supply
13	Closing auxiliary
14	Closing auxiliary
15	Opening auxiliary
16	Opening auxiliary

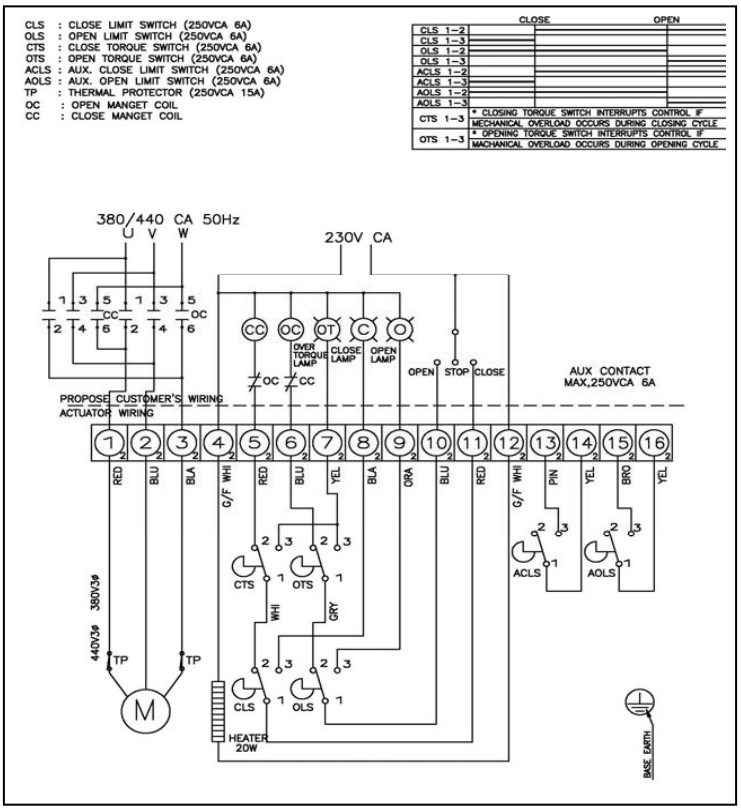

Information given as an indication only, and subject to possible modifications

Wiring for 24V 50Hz voltage (NA06-NA09)

1	Do not use
2	Do not use
3	Common
4	phase
5	Closing command
6	Opening command
7	Opening indicator light (suggestion)
8	Closing indicator light (suggestion)
9	Closing auxiliary
10	Closing auxiliary
11	Opening auxiliary
12	Opening auxiliary

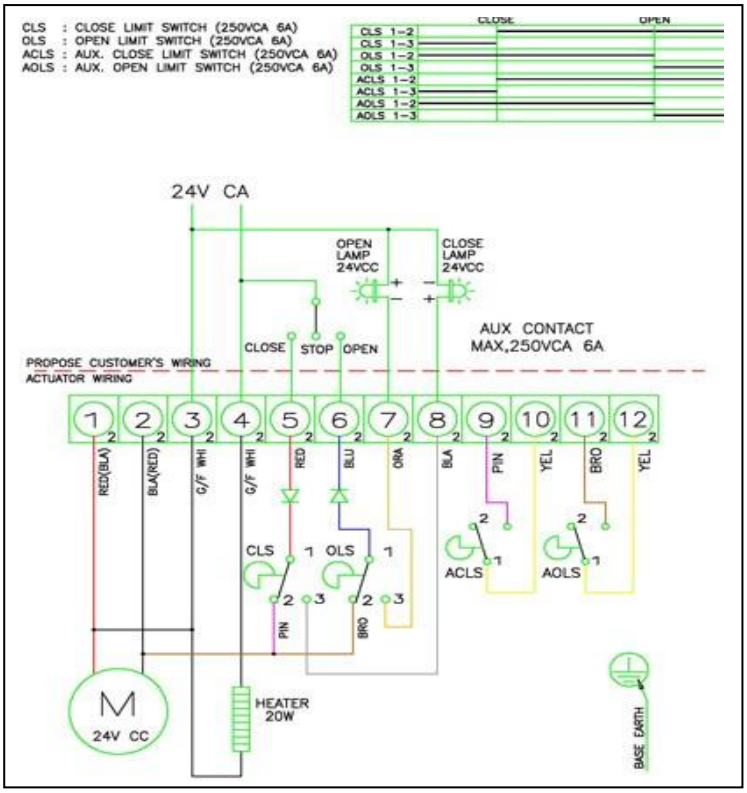

Wiring for 24V 50Hz voltage (other models)

1	Common
2	phase
3	Not used
4	Closing command
5	Opening command
6	Opening indicator light (suggestion)
7	Closing indicator light (suggestion)
8	Not used
9	Closing auxiliary
10	Closing auxiliary
11	Opening auxiliary
12	Opening auxiliary

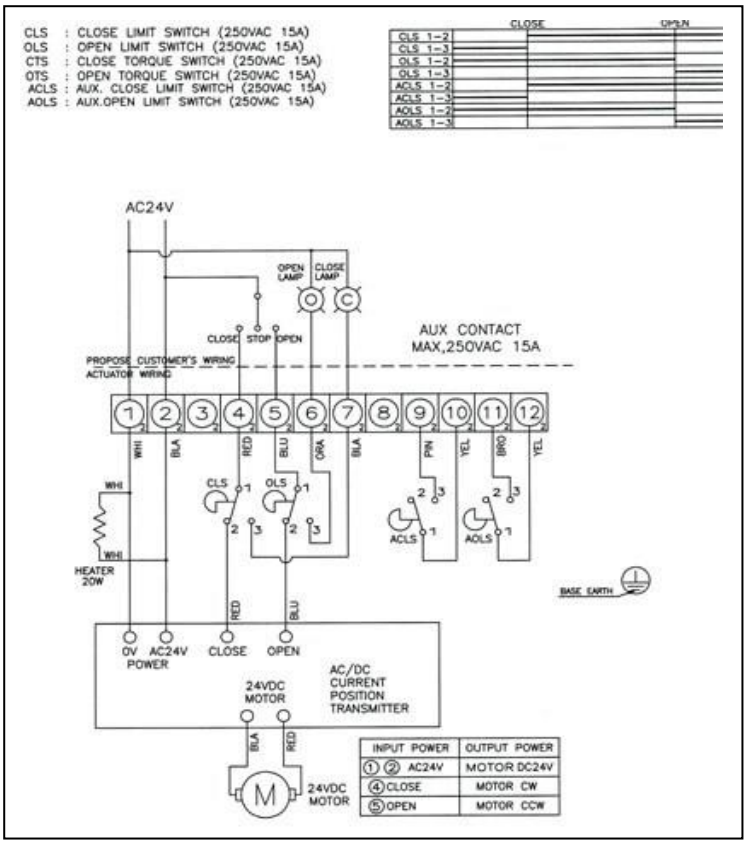

Information given as an indication only, and subject to possible modifications

Proposals for 24Vcc (NA06-NA09) wiring

1	Connected to terminal 10 with diode
2	Connected to terminal 11 with diode
3	Not used
4	Heater power supply
5	Connected to terminal 2
6	Connected to terminal 1
7	Not used
8	Powered closing switch
9	Powered opening switch
10	+ / - Opening command
11	+ / - Closing command
12	Heater power supply
13	Closing auxiliary
14	Closing auxiliary
15	Opening auxiliary
16	Opening auxiliary

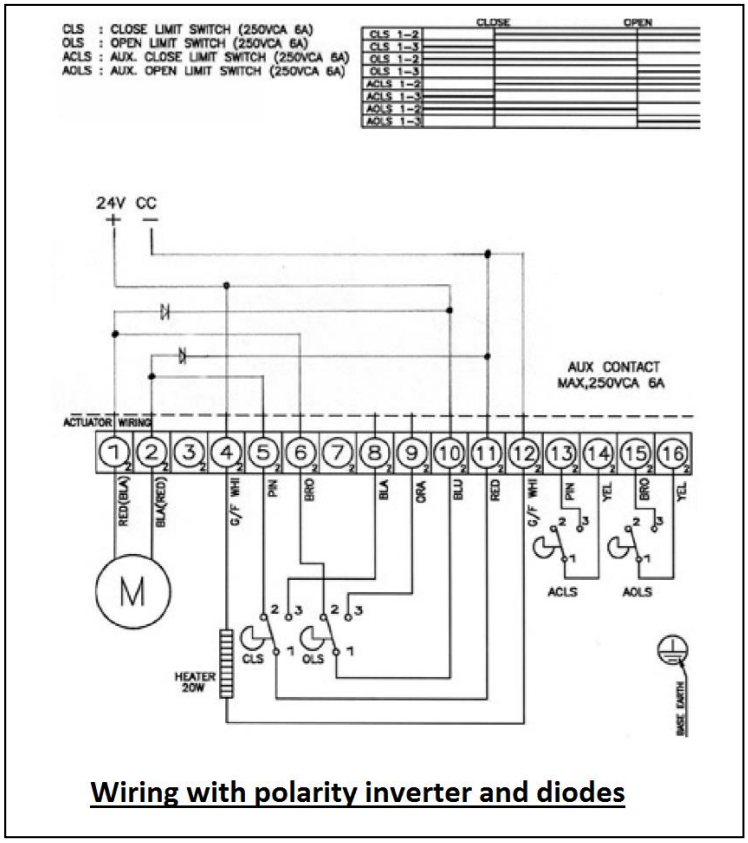

Wiring with polarity inverter and diodes

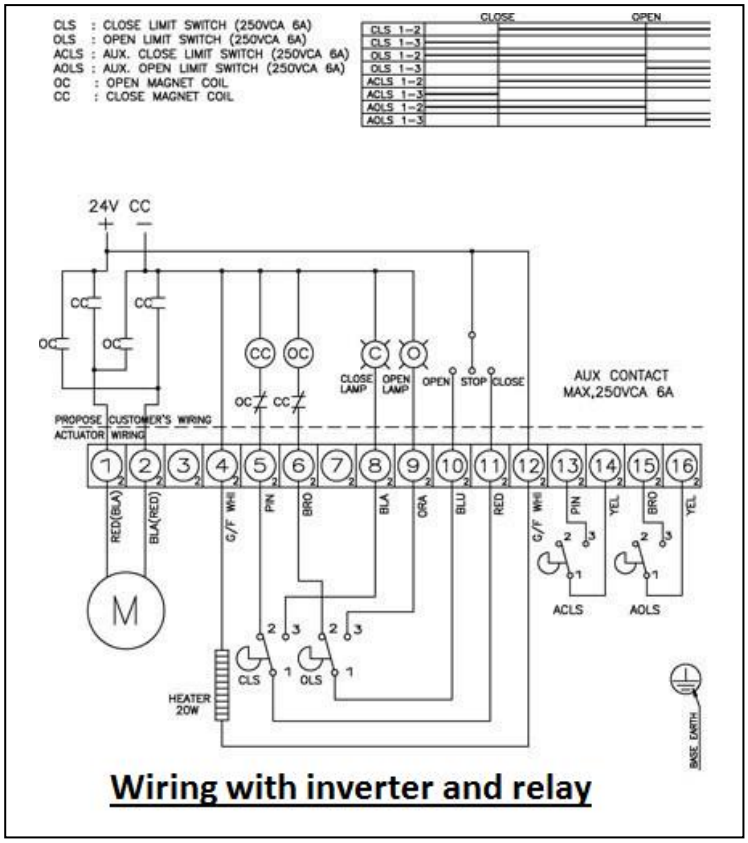

Wiring with inverter and relay

Information given as an indication only, and subject to possible modifications

Proposition for 24V DC wiring (other models)

1	Connected to terminal 10 with diode
2	Connected to terminal 11 with diode
3	Not used
4	Heater power supply
5	Connected to terminal 2
6	Connected to terminal 1
7	Power-supplied over-torque switch
8	Powered closing switch
9	Powered opening switch
10	+ / - Opening command
11	+ / - Closing command
12	Heater power supply
13	Closing auxiliary
14	Closing auxiliary
15	Opening auxiliary
16	Opening auxiliary

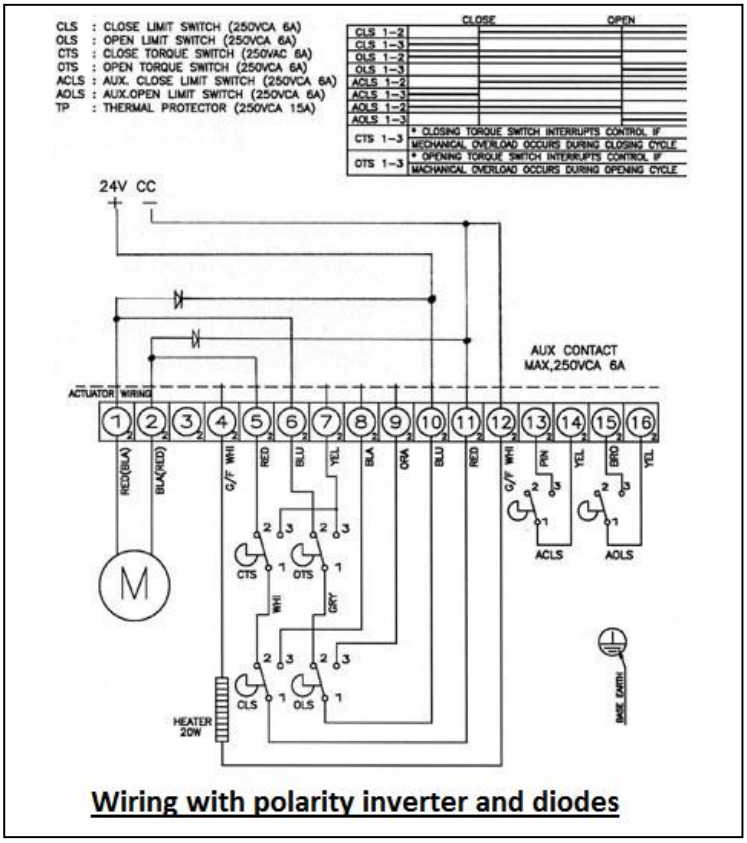

Wiring with polarity inverter and diodes

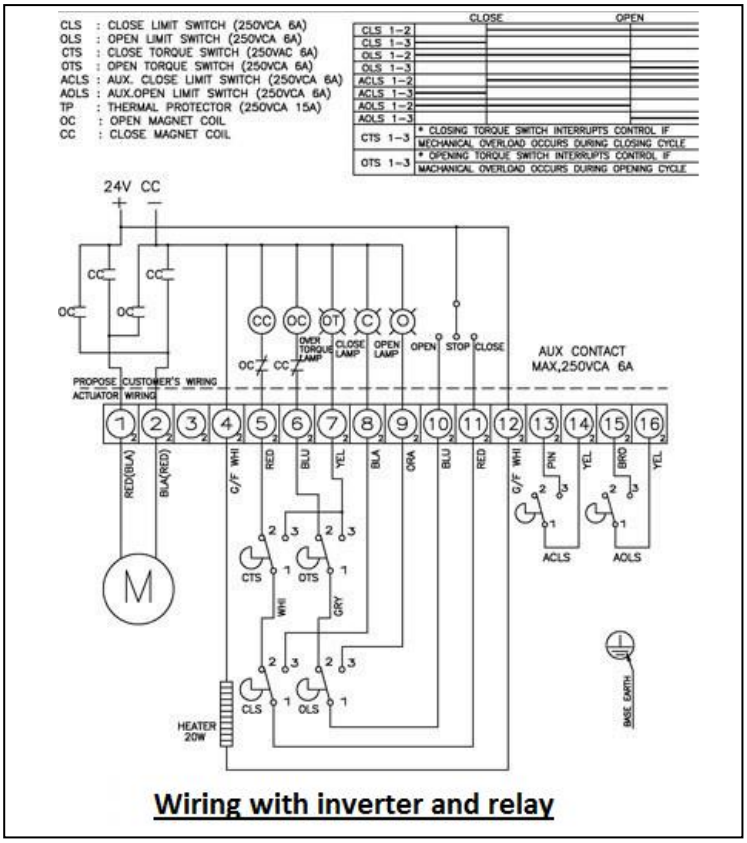

Wiring with inverter and relay

Information given as an indication only, and subject to possible modifications

OPTIONS

1	NA PIU: version with feedback potentiometer
2	NA CPT: version with position transmitter 4-20 mA
3	NA PCU: version with adjustment card 0-10V, 2-10V, 2-20 mA, 4-20 mA
4	NA LCU: version with local control
5	NA RBP: version with in-built fail safe/security
6	Anti-seismic test
7	Low temperature version -40
8	IP 68 version
9	120°, 135°, 180°, 270° rotation angles

OPTION LCU : LOCAL CONTROL UNIT

The LCU option allows the actuator to be operated through two different modes. The first one is the standard remote control. The second is the local control using the switch button plug on the actuator. This option is use full for maintenance and periodic inspection.

AVAILABLE MODELS

NA09 LCU : 90 Nm
NA15 LCU : 150 Nm
NA28 LCU : 280 Nm
Supply voltages : 230 Vac, 400 Vac

SPECIFICATION

1	IP code : IP67
2	Housing : aluminium
3	Remote, Off, local selector switch
4	Open, stop, close selector switch
5	Remote, local, open, over torque, close LED Lamp
6	Pad lockable

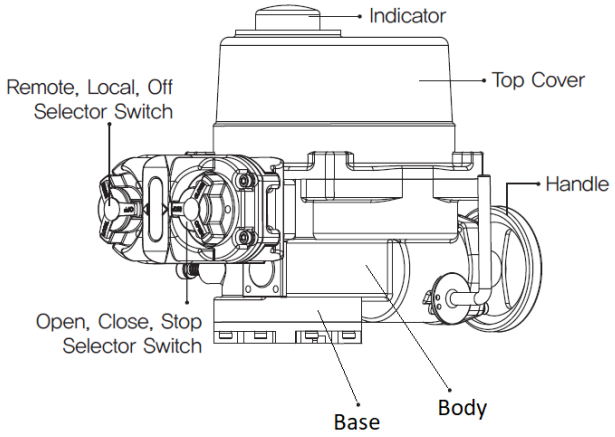

Information given as an indication only, and subject to possible modifications

DIMENSIONS (mm)

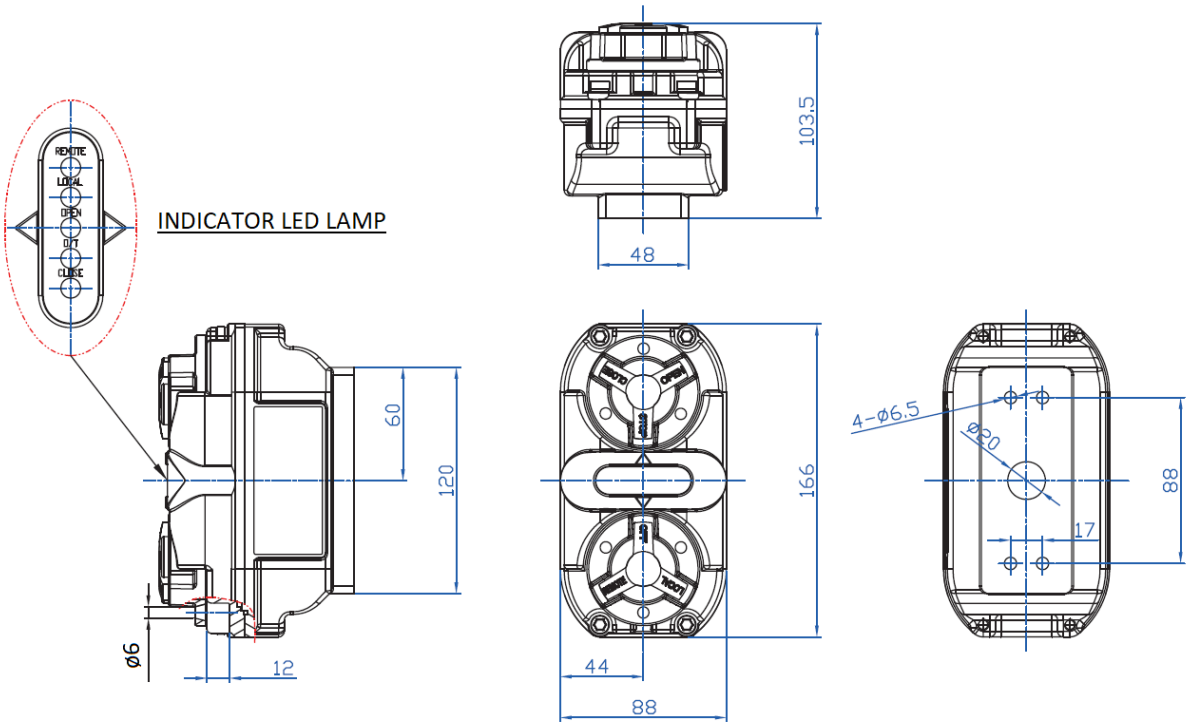

Remote, local, open, Over torque, close LED lamp

Information given as an indication only, and subject to possible modifications

ELECTRICAL DIAGRAM NA LCU

NA09 230V

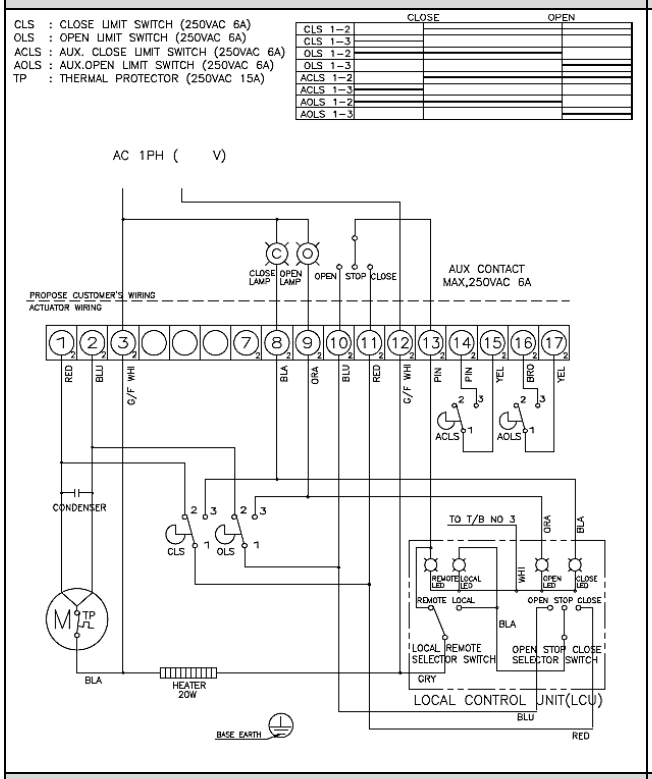

NA09 380V

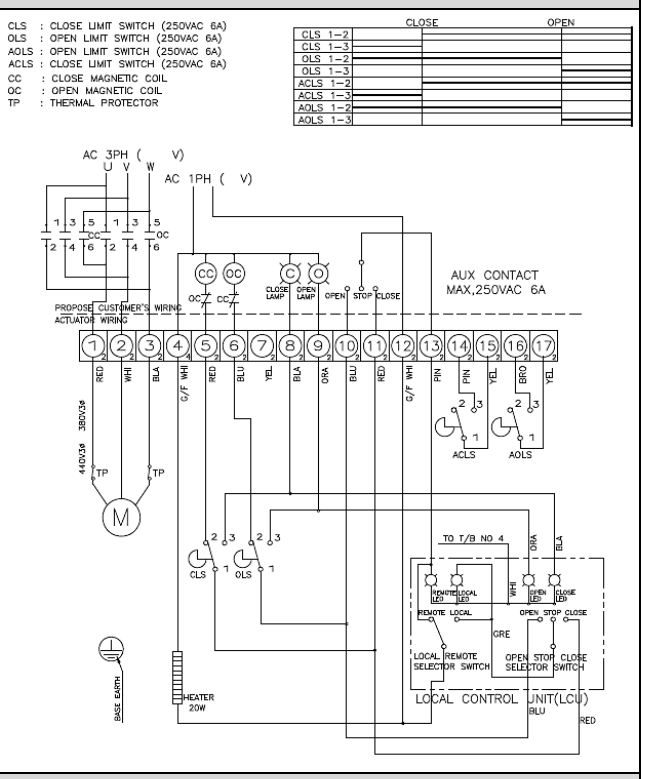

NA15 230V

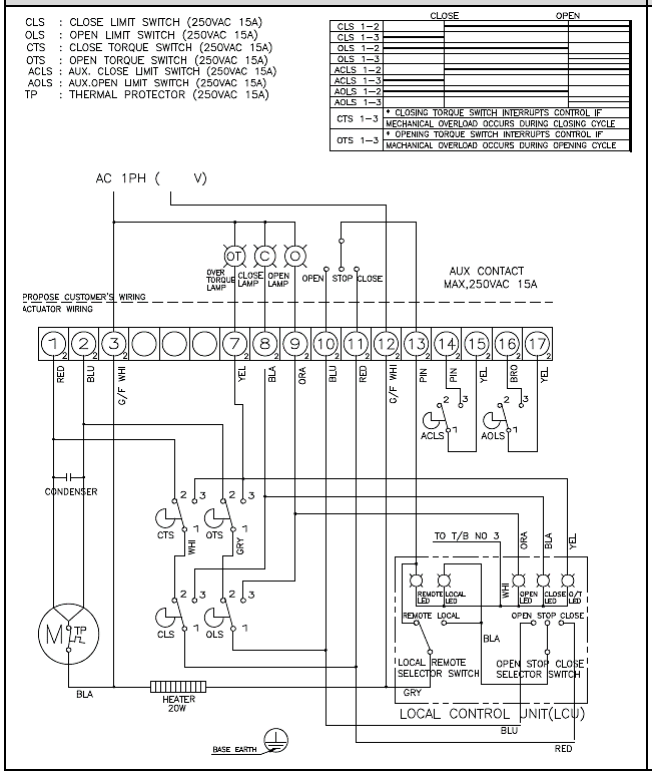

NA15 380V

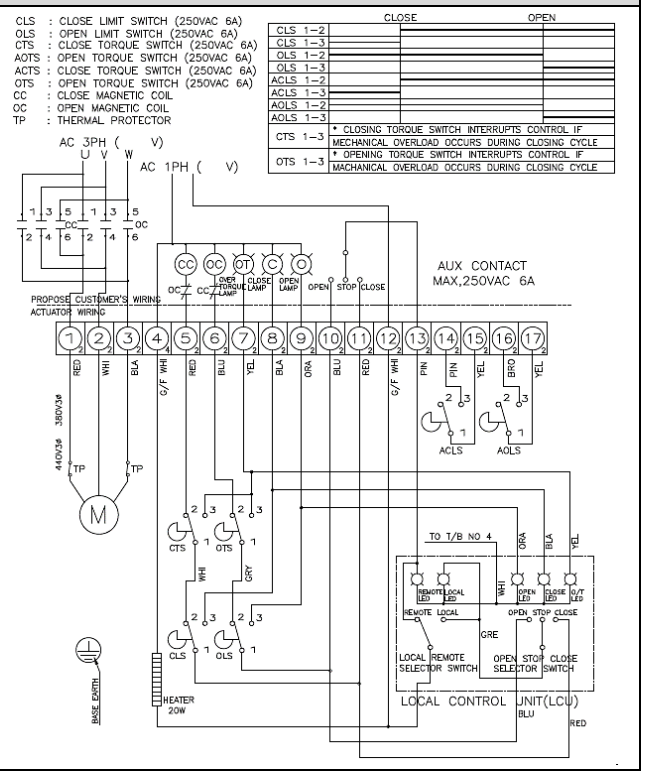

Information given as an indication only, and subject to possible modifications

OPTION RBP : FAIL SAFE TYPE

The RBP option adds a safety function to the NA actuator: in normal operation, the rotations are ensured by the power supply of the grid. In safety mode (power cut-off), the actuator automatically operates (opening or closing the valve) to switch the valve to the safe position. The power is supplied by a battery installed in the side housing.

AVAILABLES MODELS

NA09 RBP : 90 Nm
NA15 RBP : 150 Nm
Supply voltage : 230 Vac

SPECIFICATION

1	IP rating : IP67
2	Housing : aluminium
3	Return to position due to lack of power
4	Power supply : 230V - 50 / 60Hz
5	Built-in battery safety unit
6	Battery size : 89 x 111 x 44 Charging volt : DC 32V 1A Charging time : 3 heures Battery type : Ni-Cd 1,2V 20EA Emergency (time) : 15 minutes (Max) Battery weight : 1,1 kg

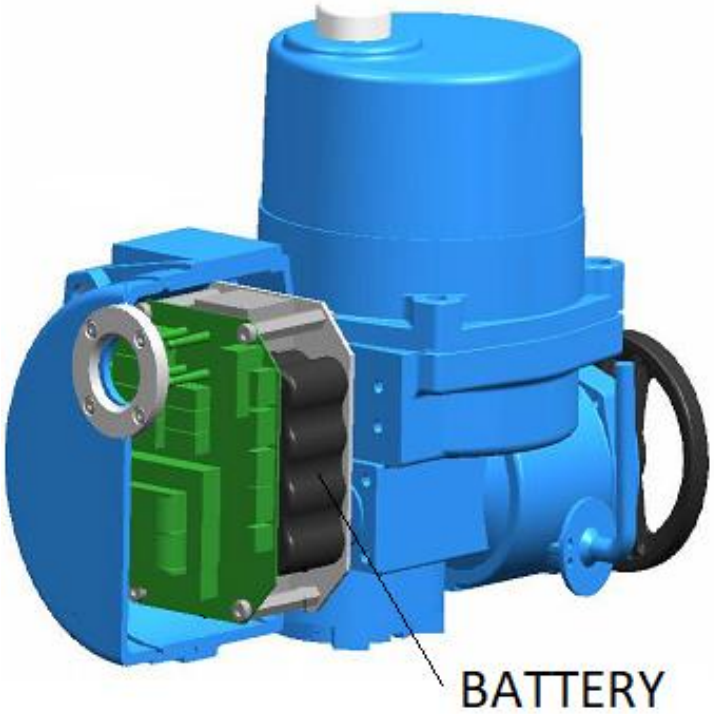

Information given as an indication only, and subject to possible modifications

DIMENSIONS (mm)

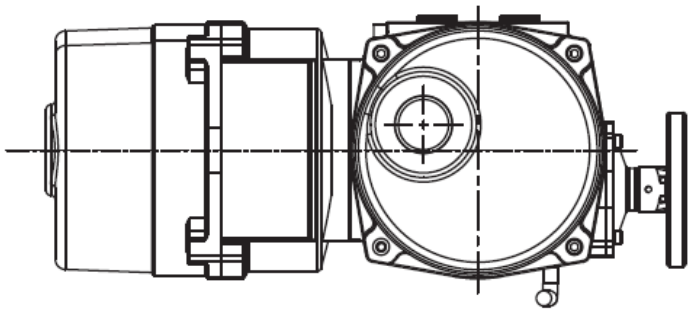

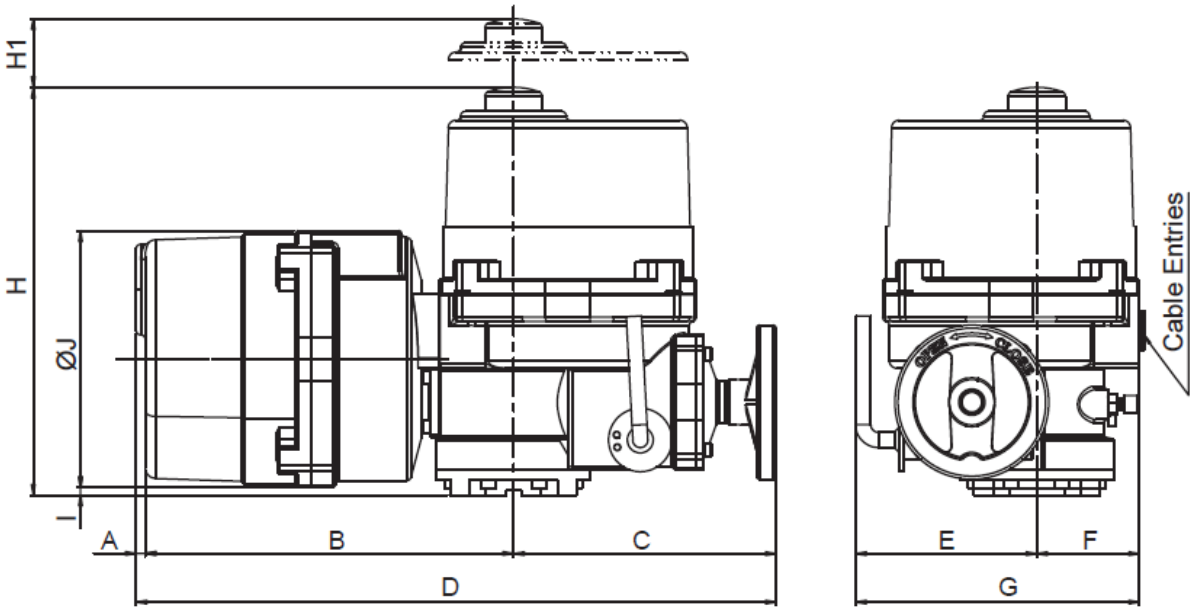

Rep	A	B	C	D	E	F	G	H	H1	ØJ
NA 09	6	244	174	424	120	68	188	270	108	170
NA 15	6	265	184	455	139	85	224	274	108	170

Information given as an indication only, and subject to possible modifications

SCHEMA ELECTRIQUE NA RBP

NA RBP 230 Vca

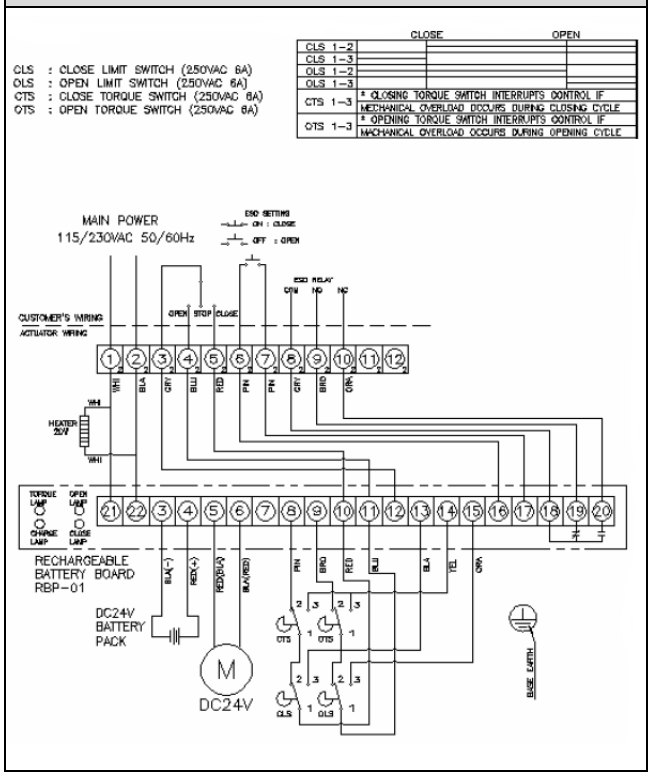

SECTORIEL S.A.
45 rue du Ruisseau
38290 SAINT QUENTIN-FALLAVIER – FRANCE
Telephone: +33 4 74 94 90 70 - Fax: +33 4 74 94 13 95
www.sectoriel.com / Email : sectoriel@sectoriel.fr